OPERATOR'S MANUAL
MR A4 SERIES

HECKLER ★ KOCH

WARNING **Read this manual carefully before handling, loading, or using your HK MR A4 Series firearm.**

ALL MODELS AND CALIBERS

SAFETY RULES: Read this entire operator's manual carefully and thoroughly before using, handling, or loading your firearm. The warnings and instructions in this operator's manual are important. Firearm safety is YOUR responsibility. DO NOT use this firearm if you DO NOT fully understand the warnings and instructions in this operator's manual. Firearms can be dangerous if not handled properly and safely. Failure to follow the warnings and instructions in this operator's manual, or the improper use of this firearm, may result in serious injury or death, damage to the firearm, or other damage to property. This manual should always accompany your HK MR A4 firearm if it is sold, given, or loaned to another person.

Whether you are an experienced shooter or have never handled a firearm before, you must read this entire manual carefully before handling, loading, or firing your HK MR A4 firearm. Your safety and the safety of others depends upon you following the instructions and warnings in this manual and constant use of safe firearms practices. If you are unfamiliar with firearms, take a course in the safe handling of firearms conducted by a qualified firearms instructor, your local gun club, or a similar qualified organization.

This manual contains safety warnings and instructions preceded with, ⚠WARNING ⚠CAUTION or *NOTICE* symbols. These signal words are designed to draw your attention to important safety information.

⚠WARNING Indicates a hazardous situation which, if not avoided, could result in death or serious personal injury.

⚠CAUTION Indicates a hazardous situation which, if not avoided, could result in moderate or minor personal injury.

NOTICE Indicates safety practices not related to personal injury.

These Warnings, Cautions and Notices will apply at all times.

⚠WARNING Failure to follow the safety information and instructions in this manual could result in death, serious personal injury and/or property damage.

⚠WARNING Treat all firearms as if they are ALWAYS loaded. If any firearm is handled carelessly or improperly, you could cause a negligent discharge, which could result in death, serious personal injury, and/or property damage.

⚠WARNING Keep your finger off the trigger and outside of the trigger guard until your sights are aligned on the target and you are ready to fire.

⚠WARNING Keep your finger off the trigger and outside of the trigger guard while loading or unloading the firearm.

⚠WARNING Keep your finger off the trigger and outside of the trigger guard while pulling the firearm out of the holster or while returning it to the holster.

⚠WARNING Be sure of your target, backstop, and what is beyond.

⚠WARNING NEVER give a firearm to or take a firearm from anyone unless the action is open, and the magazine and chamber are free of any ammunition or brass.

⚠WARNING NEVER take anyone's word that a firearm is unloaded. ALWAYS check for yourself, with the firearm pointed in a safe direction and your finger off of the trigger and outside the trigger guard.

⚠WARNING Be sure that the ammunition you are using is factory loaded, is of the correct caliber for the firearm in which it is to be used, and that it is not damaged in any way.

⚠WARNING Before firing, remove the magazine from the firearm, lock the action open, make sure the chamber is CLEAR of any ammunition or brass, and check the barrel of the unloaded firearm for any possible obstructions.

⚠WARNING Before firing any firearm that is unfamiliar to you, make sure that you understand exactly how it functions. A lack of familiarity with the firearm can result in serious injury or death, damage to the firearm or other damage to property. Attend a certified training course on any firearm which you intend to use or with which you are not sufficiently familiar.

⚠WARNING ALWAYS wear hearing and eye protection when using your firearm.

⚠WARNING Firearms should be locked and stored unloaded, secured, and separately from ammunition in a suitable container out of the sight and reach of children and/or any unauthorized individuals.

⚠WARNING Never store or transport ammunition in the same container as your firearm.

⚠WARNING Alcohol or drugs should NEVER be used before or during use or handling of a firearm. Your vision, balance, coordination, and judgement could be seriously impaired, making your firearm handling unsafe.

⚠WARNING If or when you are taking medication, ALWAYS seek a doctor's advice to be sure you are able to use and handle your firearm properly and safely.

⚠WARNING NEVER alter or modify your firearm because alterations or modifications may impair the use of the firearm, including causing malfunctions or dangerous conditions.

⚠WARNING Discharging firearms in poorly ventilated areas, cleaning firearms, or handling ammunition may result in exposure to lead; a substance known to be associated with birth defects, reproductive harm and other serious injury or death. Always have adequate ventilation. Wash hands thoroughly after handling ammunition, firing your firearm, and/or performing preventative maintenance on your firearm to minimize your lead exposure.

⚠CAUTION Keep all body parts, including the hands and fingers, away from the muzzle to avoid injury or burns.

⚠CAUTION Be sure that no part of either hand touches or interferes with the bolt carrier assembly. The bolt carrier assembly is moved backward by the recoil force of the firearm during firing and may cause serious injury.

Not all HK products are available to all U.S. states. Please check local laws and regulations before ordering. Heckler & Koch does not warrant that a person may legally purchase, possess, or carry specific items according to federal, state, or local laws.

Before leaving the factory, your HK MR A4 firearm was tested, carefully inspected, and packaged. However, HK cannot control what happens to its firearms after they leave the factory, therefore, carefully examine your HK MR A4 firearm when you acquire it to ensure that it is unloaded and undamaged.

If you need another copy of this manual, do not understand any of the warnings or instructions, or if you have any problems operating your HK firearm, contact us at:

HECKLER & KOCH
5675 Transport Boulevard
Columbus, Georgia 31907
Customer Service: 706-701-5554
USA Website: www.hk-usa.com • Email: cs@heckler-koch-us.com

⚠WARNING READ THE INSTRUCTIONS AND WARNINGS IN THIS OPERATOR'S MANUAL CAREFULLY BEFORE USING OR HANDLING THIS Firearm. A firearm has the capability of taking your life or the life of someone else! Be extremely careful with your firearm. An accident can occur at any time and is almost always the result of not following basic safety rules.

OPERATOR'S MANUAL

MR A4 SERIES

HECKLER ★ KOCH

HECKLER & KOCH
5675 Transport Boulevard
Columbus, Georgia 31907
Customer Service: 706-701-5554
USA Website: www.hk-usa.com • Email: cs@heckler-koch-us.com

© Heckler & Koch USA (Heckler & Koch Inc. and Heckler & Koch Defense Inc.) Aug 2026
All rights reserved. Specifications and models are subject to change without notice.

DO NOT DISCard THIS OPERATOR'S MANUAL. This Operator's Manual should be kept with this firearm and be transferred with this firearm if there is a change in ownership or it is presented to another person.

TABLE OF CONTENTS

Safety Precautions 2-3

Clearing the MR A4 Firearm 6

Section 1 **Nomenclature and Assembly Groups** 7-8

Section 2 **Specifications** 9

Section 3 **Function and Operation** 10

Section 4 **Instructions for Use** 12

Ammunition 12

Filling the Magazine 13

Emptying the Magazine 13

Loading the MR A4 14

Firing the MR A4 16

Gas Block Adjustment Settings 17

Reloading the MR A4 18

Unloading and Safety Check 18

Section 5 **Disassembly and Assembly** 20

Disassembly (Field Stripping) of the MR A4 20

Assembly (Reassembly) of the MR A4 25

Function Check 31

Magazine Disassembly 33

Magazine Assembly 35

Section 6 **Handguards** 36

Removal / Installation 36

Sight Installation 37

Section 7 **Cleaning and Maintenance** 38

Lubrication 39

Inspection 42

Storage and Transport 43

Section 8 **Troubleshooting Problems & Repair** 44

Section 9 **Exploded Diagram and Parts List** 46

Section 10 **Warranty** 54

Section 11 **Youth Handgun Safety Notice** 57

Section 12 **State Required Safety Notices** 59

Firearms Service Record 61

CLEARING THE MR A4

1. ON SAFE – Point the muzzle in a safe direction with the finger off the trigger and outside the trigger guard. Place the selector on "SAFE". The safe position is indicated by a closed white box containing a bullet symbol with an "X" over it.

2. REMOVE MAGAZINE - Remove the magazine (if applicable) by depressing the ambidextrous magazine release button located on either side of the lower receiver.

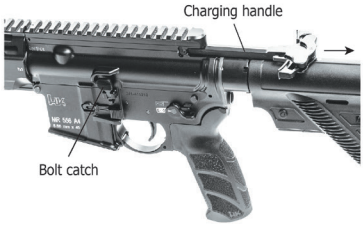

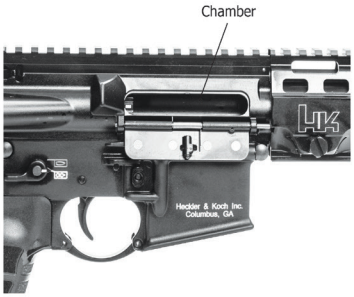

3. RETRACT BOLT – Depress the catch located on the charging handle and rack the bolt to the rear two or three times in quick succession to extract and eject any cartridges that may have been loaded into the barrel.

4. LOCK BOLT TO THE REAR – Lock the bolt to the rear by pulling the charging handle all the way back. Once the bolt reaches its limit of rearward travel, depress the bottom of the bolt catch located on the left hand side of the lower receiver, or by pushing up on the lever on the right hand side of the lower receiver.

5. INSPECT THE CHAMBER – Perform a visual and physical inspection of the chamber area to ensure that no live rounds are present in the firearm prior to disassembly.

6. RETURN THE BOLT TO BATTERY – Depress the grooved paddle (top portion) of the bolt catch on the left side of the lower receiver or press down on the lever on the right side of the lower receiver to disengage the bolt carrier group, allow the action spring to move the bolt all the way forward.

SECTION 1 — NOMENCLATURE & ASSEMBLY GROUPS

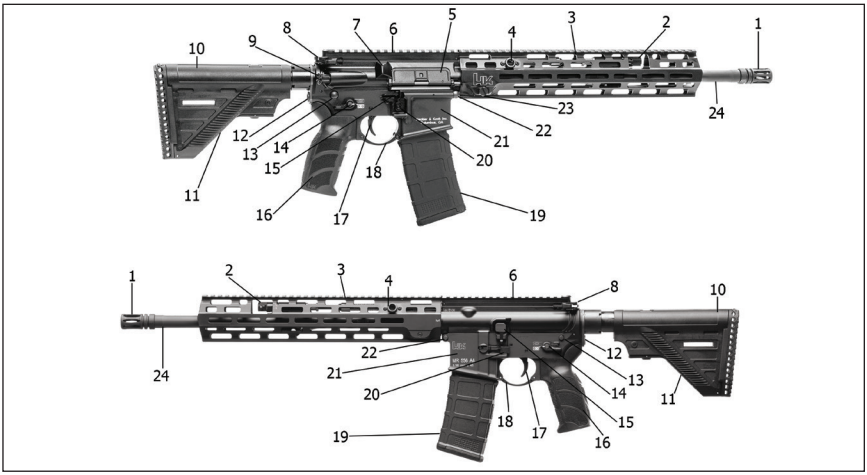

Fig. 1 – MR556 A4 Right and Left View

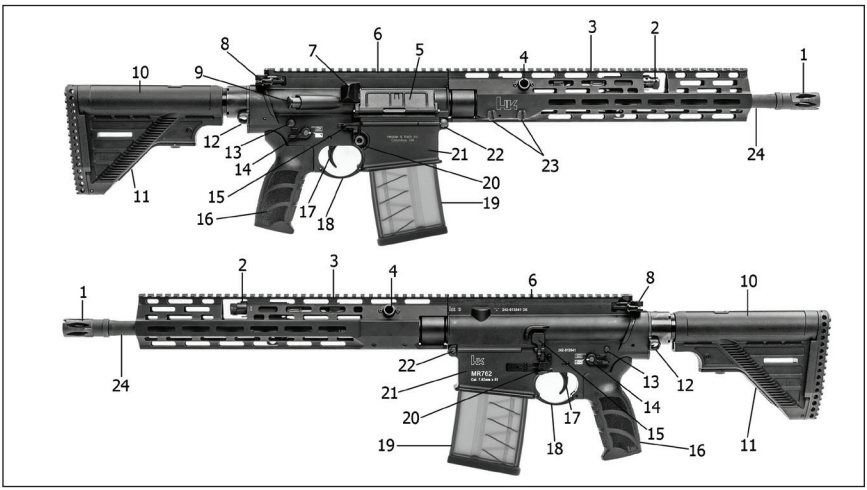

Fig. 2 – MR762 A4 Right and Left Views

1. Muzzle device
2. Gas block –
   with switch for normal and suppressed
3. Lightweight M-Lok handguard
4. Quick detach sling cup –
   located on left and right side of handguard
5. Dust cover
6. Upper receiver
7. Shell deflector
8. Ambidextrous charging handle
9. Forward assist
10. Buttstock
11. Buttstock adjustment lever
12. Receiver end plate –
    with quick detach sling cup
13. Takedown pin
14. Ambidextrous 45º safety/selector
15. Ambidextrous bolt catch/release
16. Ergonomic pistol grip
17. Trigger
18. Trigger guard
19. Magazine
20. Ambidextrous magazine release
21. Lower receiver
22. Pivot pin
23. Handguard mounting bolt(s)
24. Barrel

ASSEMBLY GROUPS

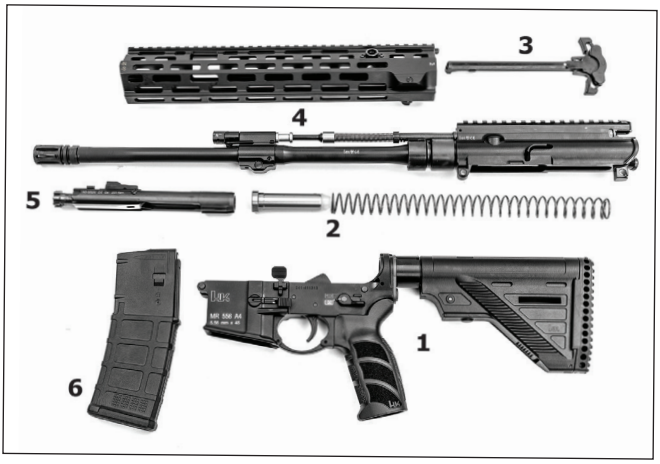

Fig. 3 – MR556 A4 Major Assembly Groups

Fig. 4 – MR762 A4 Major Assembly Groups

1. Lower Receiver Assembly - contains the Buttstock assembly (holds buffer and recoil spring), pistol grip, selector lever, trigger group, trigger guard, magazine catch/release, bolt catch/release, magazine well, pivot pin and take down pin.
2. Buffer and Recoil Spring
3. Charging Handle Assembly
4. Upper Receiver Assembly - contains the forward assist, case deflector, ejection port cover assembly, handguard, gas block, compensator, barrel, gas piston and piston rod.
5. Bolt Carrier Assembly
6. Magazine

SECTION 2 — SPECIFICATIONS

MR556 A4 Firearm

Model	MR556 A4 11”	MR556 A4 16.5”
Caliber		5.56 x 45 mm NATO
Operating principle		Gas operated, short stroke piston
Bolt system		Rotating bolt
Feed mechanism		Magazines, STANAG compatible
Mode of fire		Semi-automatic
Dimensions		
Length, maximum (stock extended)	31 in / 787 mm	36.5 in / 927 mm
Length, minimum (stock retracted)	27.72 in / 704 mm	33.25 in / 845 mm
Width		3.07 in / 78 mm
Height		7.5 in / 191 mm
Barrel length	11 in / 279 mm	16.5 in /421 mm
Barrel thread pitch		1/2 x 28
Weight		
Rifle (with empty 30 rd magazine)	6.61 lb / 2.99 kg	7.67 lb / 3.47 kg
Magazine (empty 30 rd polymer mag)		.32 lb / .14 kg
Other		
Trigger pull		4.5 - 5.6 lb / 20 - 25 N (approximate)
Rifling		6 lands & grooves, right twist, 1 in 7 in (178 mm)
Adjustable MR556 buttstock		6 positions, 96 mm of travel

MR762 A4 Firearm

Model	MR762 A4 16.5”
Caliber	7.62 x 51 mm NATO
Operating principle	Gas operated, short stroke piston
Bolt system	Rotating bolt
Feed mechanism	Magazines, 10/20 rounds
Mode of fire	Semi-automatic
Dimensions	
Length, maximum (stock extended)	39.5 in / 1003 mm
Length, minimum (stock retracted)	35.50 in / 902 mm
Width	3.23 in / 82 mm
Height	7.75 in / 197 mm
Barrel length	16.5 in /421 mm
Barrel thread pitch	5/8 x 24
Weight	
Rifle (empty 20 round magazine)	8.8 lb / 3.99 kg
Magazine (empty 20 round magazine)	.33 lb / .15 kg
Other	
Trigger pull (Two stage trigger)	4.5 - 5.6 lb / 20 - 25 N (approximate)
Rifling	4 lands & grooves, right twist, 1 in 11 in (280 mm)
Adjustable MR762 buttstock	9 positions, 96 mm of travel

SECTION 3 — FUNCTION AND OPERATION

The function and operation of the MR A4 is similar to that found in other semi-automatic firearms and consists of eight steps: (1) Feeding, (2) Chambering, (3) Locking, (4) Firing, (5) Unlocking, (6) Extracting, (7) Ejecting, and (8) Cocking.

These eight steps are explained below with a brief description of what occurs inside the firearm during each step. Assume that a full magazine is loaded in the firearm with the magazine follower spring forcing the follower and thus the top cartridge into the path of the bolt and the bolt is locked to the rear.

1. Feeding: Removal of a round from the magazine
The bolt is released from the bolt catch, either by fully cycling and then releasing the charging handle or by depressing the bolt catch. The bolt assembly moves forward, being driven by the expansion of the recoil spring. The bottom locking lugs on the bolt head act as a feed pawl, striking the top cartridge off the magazine and moving the cartridge towards the chamber in rear of the barrel.

2. Chambering: Placing and seating the round into the chamber of the barrel
The recoil spring continues to drive the bolt assembly forward until the bolt head seats the cartridge into the barrel's chamber. Chambering is complete when the extractor snaps into the extracting groove on the cartridge and the ejector is forced into the face of the bolt.

3. Locking: Closing and locking of the breech mechanism prior to the shot
Locking occurs when the bolt reaches its limit of forward travel. When the bolt is moving forward, the cam pin orients the bolt head by ensuring that the locking lugs on the bolt head will pass between the gaps of the locking lugs located on the barrel extension (chamber). The bolt then strikes the back of the barrel and then stops. The buffer spring continues to move the bolt head carrier forward, thus causing the cam pin to pivot on the bolt head's raceway. This action pivots the bolt head and rotates the bolt head's locking lugs counterclockwise until they engage the locking lugs on the barrel extension. The bolt assembly is now locked into the upper receiver.

4. Firing: Ignition of the cartridge
When the trigger is pulled, the trigger's sear surface disengages from the hammer's intercept notch and the hammer releases. The hammer moves forward under pressure from the hammer spring, disengaging the drop safety, striking the firing pin, and overcoming the inertia of the firing pin spring. This drives the firing pin against the primer, which in turn ignites the propellant in the cartridge case and propels the bullet through the barrel.

5. Unlocking: Removal of any blocking mechanism to allow the opening of the breech
Unlocking occurs after a cartridge is fired. As the bullet is forced through the barrel by expanding gases, a small amount of gas enters through the gas port into the gas block. The gas block features a small expansion chamber that quickly fills up with gas. The gas then hits the front of the gas piston, causing the three piston rings to expand, and driving the gas piston rearwards. Because the pusher rod is mounted in the gas piston, the pusher rod moves back as well. The back of the pusher rod hits the anvil (striking surface) on top of the bolt head carrier, causing the bolt head carrier to move rearwards. As the bolt carrier assembly moves rearward, the bolt cam pin rotates and unlocks the bolt from the locking lug recesses in the barrel extension. The unlocked bolt is now ready to move rearward.

6. Extracting: Removal of the fired cartridge case or live round from the chamber
With the bolt unlocked from the barrel extension, the extractor pulls the cartridge case from the chamber as the bolt carrier assembly moves rearward.

7. Ejecting: Expulsion of the fired cartridge case or live round from the firearm
Ejecting throws the empty cartridge case out of the receiver. As soon as the bolt has drawn the cartridge case clear of the chamber, the force of the ejector spring and plunger pushes the cartridge case head away from the bolt face. This causes the forward end of the cartridge case to move outward to the right. A deflector on the outside of the upper receiver deflects the cartridge case away from operator.

8. Cocking: Accomplished when the recoil spring drives the slide into battery
Cocking occurs when the hammer is forced into position for firing the next cartridge. This happens as the bolt carrier assembly travels toward the rear. The bolt carrier assembly forces the hammer back and rides over it. The hammer is caught by the disconnector if the trigger is still held to the rear and by the trigger's sear surface if the trigger has been released.

SELECTOR/SAFETY LEVER FUNCTION

NOTICE **The MR A4 firearm has ambidextrous selector/safety levers located on both sides of the lower receiver. Either lever can be manipulated and moves the lever on the other side. Unlike many AR-style firearms, the selector/safety levers of the firearm can be placed on the "SAFE" position even if the firearm is not cocked.**

"SAFE POSITION" – Place the selector lever with the point facing towards the closed white box containing a bullet symbol with an "X" over it (towards the muzzle, Fig. 5).

"FIRE"– Place the selector lever with the point towards the closed red box containing a red bullet symbol in it (straight up position) (Fig. 6).

Fig. 5 – SAFE

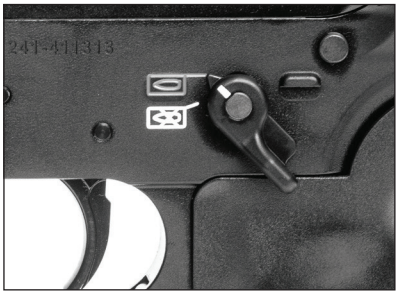

Fig. 6 – FIRE

AMMUNITION

⚠WARNING Do not use reloaded, remanufactured, or handloaded ammunition because it may not meet applicable SAAMI, NATO, or CIP standards and could cause death, serious personal injury, and/or damage to your firearm. Only use high quality, commercially manufactured ammunition in the same caliber as your firearm.

***NOTICE* HK firearms are designed to function with high-quality, brass-cased ammunition. Use of steel or aluminum-cased cartridges is not recommended and could adversely affect safe and reliable functioning. Use of cast-lead bullets is also not recommended.**

HK specifically disclaims any responsibilities for any damage or injury that may occur because of, or as a result of, the use of faulty, remanufactured, reloaded, or hand loaded ammunition, or of cartridges other than those for which the firearm was originally chambered. Use of remanufactured, reloaded, or hand loaded ammunition may void your warranty.

By using ammunition with match bullets or other match grade ammunition the MR A4 will achieve the best level of accuracy. Use ammunition of the appropriate caliber and of recent manufacture.

The MR556 A4 is chambered for 5.56 x 45 mm ammunition and will function safely and reliably with most high quality 5.56 mm and caliber .223 Remington ammunition. The MR762 A4 is chambered for 7.62 x 51 mm ammunition and will function safely and reliably with most high quality 7.62 NATO and .308 Winchester ammunition.

MR A4 firearms are designed to fire quality, factory-loaded ammunition loaded to NATO, SAAMI (Sporting Arms and Ammunition Manufacturers' Institute), or CIP (Permanent International Commission for the Proof of Small Arms) specifications for use, specifically in firearms.

Consider the following guidelines when selecting the correct ammunition for your firearm:

1. Be sure the ammunition you have chosen is compatible with your firearm: proper caliber, cartridge, bullet weight, etc.

2. Prior to loading the magazine and chamber, carefully inspect all cartridges for any abnormalities, including, but not limited to:
   - Cracked, split, dirty, or corroded cases
   - Improperly seated projectiles and/or primers
   - Damaged projectiles

3. Do not attempt to fire a cartridge in which the projectile has been forced back into the case. Upon firing, this condition may result in increased chamber pressure above safe limits.

4. Do not fire ammunition that:
   - Is military surplus
   - Is assembled with corrosive primer and/or propellant
   - Is exposed to oil, grease, water or direct sunlight. If possible, remove contaminants before use and cool down ammunition exposed to direct sunlight or heat. (Exposure to sources of heat could raise the chamber pressure of the cartridge above safe limits).

FILLING AND EMPTYING THE MAGAZINE

⚠WARNING NEVER forcefully insert a loaded magazine into a firearm. This may cause the firearm bolt to close, chambering a cartridge and making the firearm ready to fire. When inserting a magazine, always be sure the firearm is pointed in a safe direction (a safe direction is one in which no one can possibly be injured in the event of an unintentional discharge) with your fingers off the trigger and outside the trigger guard. Failure to do so could cause you to unintentionally fire the firearm, resulting in serious injury, death, or other damage to property.

NOTICE Do not attempt to load more than the prescribed number of cartridges into the magazine. Do not alter the shape of the magazine housing, follower or spring. To do so may cause stoppages or the magazine may not seat properly in the firearm. Magazines may be loaded by hand, one round at a time, or quickly loaded using a magazine loader. Loading a magazine by hand is depicted below (Fig. 7).

Filling the magazine

1. Hold the magazine with one hand. Place the cartridges onto the follower between the magazine lips and push the cartridge, with your thumb, down underneath the lips and ensuring the projectile is facing the front of the magazine and that the cartridge rim is fully to the rear of the magazine.

2. Repeat this step until the magazine is filled with the appropriate number of cartridges (10 or less for a 10-round magazine, 20 or less for a 20-round magazine, and 30 or less for 30-round magazines). Do not overfill magazines.

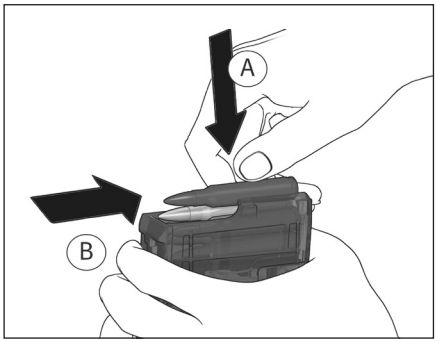

Fig. 7 – Loading a magazine by hand

⚠CAUTION Ensure cartridges, especially those to be loaded into the magazine, are free of sand, mud, moisture, frost, snow, ice, grease, or other foreign matter.

Emptying the magazine

1. Hold the magazine with one hand. Push the cartridges forward out of the magazine with the thumb of the other hand. Do not allow the cartridges to drop on a hard surface or they may become damaged. Do not unload cartridges using another cartridge, damage to the cartridge or injury to the operator may occur.

NOTICE The magazine may be loaded into the weapon with the bolt assembly open or closed. The procedure listed below is for the bolt open.

LOADING THE MR A4

1. Place the selector lever in the SAFE position. Point the muzzle in a safe direction with the trigger finger off the trigger and outside the trigger guard.

2. Pull the charging handle rearward to open the bolt (Fig. 8). Depress either the paddle on the left side or the lever on the right side while slowly allowing the bolt carrier assembly to go forward engaging the bolt catch and locking the bolt to the rear (Fig. 9, 10).

Fig. 8 – Pull the charging handle rearward

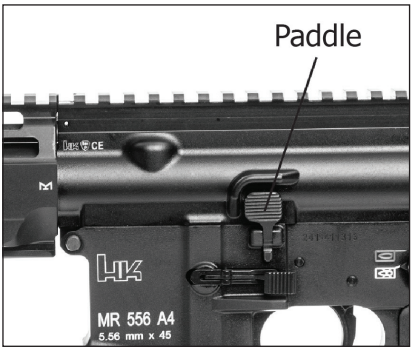

Fig. 9 – Paddle located on left side

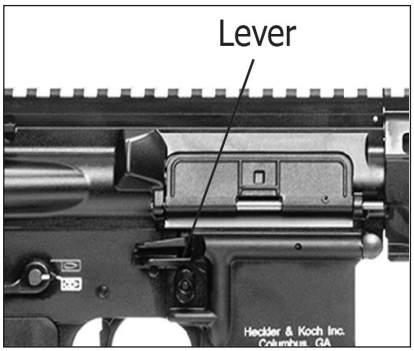

Fig. 10 – Lever located on right side

3. Check the chamber to ensure it is CLEAR. See Clearing the MRA4 on page 6.

4. Insert a loaded magazine into the magazine well until the magazine catch engages the magazine (Fig. 11).

5. Tap upward on the magazine to ensure it is properly seated and tug slightly downwards on the magazine to verify it is properly engaged by the magazine catch.

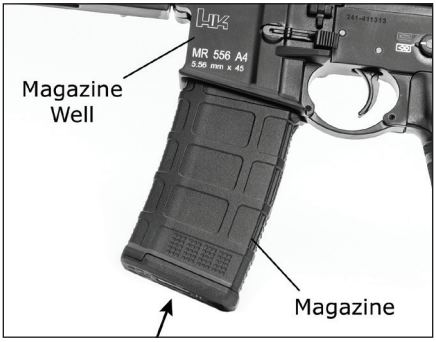

Fig. 11 – Inserting Magazine into the Firearm

6. Depress either the upper portion of the paddle or push down on the lever of the bolt catch. The bolt should go forward, stripping the top cartridge from the magazine and feeding it into the chamber (Fig. 12).

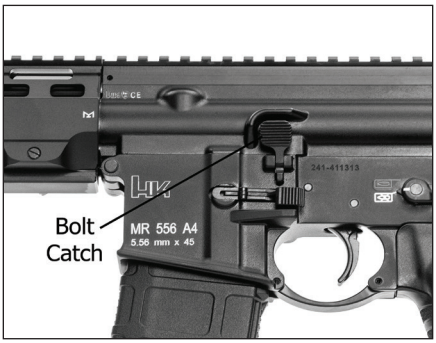

Fig. 12 – Depressing Bolt Catch to Chamber a Cartridge

7. Tap the forward assist to ensure the bolt is fully forward and locked (Fig. 13).

Fig. 13 – Tap Forward Assist

⚠WARNING Always assume every weapon is loaded until it is verified through visual and physical inspection that it is not. Refer to this manual for Clearing Procedure.

NOTICE **Close the ejection port cover if the weapon is not to be immediately fired.**

FIRING THE MR A4

WARNING **ALWAYS be sure of your target and what is behind it! A bullet from a MR A4 can travel as far as 4.5 miles. It can easily penetrate wood, plasterboard walls, or even a car door. ALWAYS be sure that your backstop is adequate to stop and contain bullets before firing so that you do not hit anything outside of the shooting range area.**

WARNING **NEVER shoot at a hard surface, such as a rock, or a liquid surface, such as water, because a bullet may ricochet and travel in any direction, striking you or someone else. If in doubt, do not shoot.**

WARNING **ALWAYS be sure that the barrel of your MR A4 is CLEAR of obstructions before firing. If any obstruction is found, remove it – including any excess lubricants – before firing so that your firearm will function safely and correctly. Any obstruction in the barrel could prevent the firearm from firing properly and result in death or serious personal injury, and/or damage to the firearm.**

WARNING **NEVER use your MR A4 firearm if it fails to function properly, and never force the action closed on a jammed cartridge because it could cause the cartridge to explode.**

WARNING **ALWAYS wear adequate eye protection when firing the firearm. Eye protection should, at a minimum, provide impact protection with side panels and meet ANSI standard Z87.1. Unprotected eyes can be injured by fragments expelled from the firearm, ejected cartridge cases, ruptured cartridge cases, splash back from targets, target frames, or backstops.**

WARNING **ALWAYS wear adequate commercially manufactured ear protection when firing the firearm. Unprotected exposure to gunshot noise can cause tinnitus and/or permanent hearing loss.**

WARNING **Hot gasses and powder are forcefully expelled from your firearm when it is fired. ALWAYS be sure that your hands and all parts of your body are kept away from the muzzle of your firearm.**

WARNING **ALWAYS ensure that a responsible and competent person is placed in charge to maintain safety, discipline, and control when a group is firing at a range, to reduce the likelihood of a negligent discharge.**

WARNING **ALWAYS transport your MR A4 unloaded with the bolt carrier locked open in the rearward position while on a range until preparing to fire. Always keep the firearm pointed towards the backstop when loading, firing, and unloading.**

CAUTION **ALWAYS keep yourself and others clear of the ejection port because spent cartridges are hot and are ejected with enough force to cause injury. NEVER touch the bolt carrier assembly or barrel immediately after firing, because they may be hot and could cause burns.**

CAUTION **NEVER place your fingers in the ejection port, other than when the bolt carrier is locked in the fully rearward position and you are checking to ensure that the chamber is empty. Your fingers could be injured by the movement of the bolt carrier assembly.**

CAUTION **NEVER fire your firearm near an animal unless it is trained to accept that noise. An animal's startled reaction could injure it or cause it to injure you or someone else.**

⚠WARNING Before firing the MR A4, ensure that:
1. The firearm is pointed only at your intended target.
2. The bore is clear of obstructions.
3. You are sure of your backstop and the impact area beyond.
4. Your hands and fingers are away from the muzzle.

GAS BLOCK ADJUSTMENT SETTINGS

NORMAL (N)
- Intended for use without a suppressor (Fig. 14)

Suppressed (S)
- Intended for use with a suppressor installed (Fig. 15)

NOTICE **Some modern "flow through" suppressors do not require the use of the suppressed setting.**

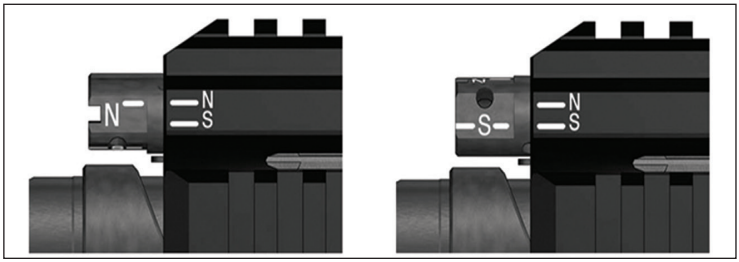

Fig. 14 –Gas block adjustment set to Normal (N)

Fig. 15 – Gas block adjustment set to Suppressed (S)

⚠WARNING The gas adjustment knob will become hot while shooting. Always allow time to cool before adjusting without a tool.

⚠WARNING Do not place your hand infront of the gas block while firing.

NOTICE **The MR A4 is not shipped with sights included.**

1. Sight in on the target and acquire proper sight picture and sight alignment.

2. Place the selector lever on "FIRE".

3. Employing proper breathing techniques, fire the firearm by slowly squeezing rearward on the trigger until the hammer releases from the sear.

RELOADING THE MR A4

The magazine in the weapon is empty. The bolt is held to the rear by the bolt catch. Same procedure as above, except the bolt is already locked to the rear and you must first set the selector to "SAFE".

1. Set the selector lever to "SAFE".
2. Depress the magazine release button. Remove the empty magazine from the magazine well. Store the empty magazine in a magazine pouch.
3. Insert a loaded magazine into the magazine well until the magazine catch engages the magazine (Fig. 16).

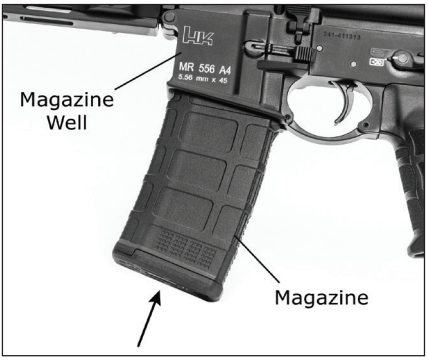

Fig. 16 – Insert loaded magazine into the magazine well

4. Tap upward on the magazine to ensure it is properly seated and tug slightly on the magazine downwards to ensure the magazine is properly engaged by the magazine catch.
5. Push the bolt catch in to release the bolt and to chamber a round.
6. The weapon is now loaded and set on "SAFE."

UNLOADING AND SAFETY CHECK

⚠WARNING The firearm is not EMPTY or unloaded until the magazine is removed and the chamber is CLEAR. It is possible that a cartridge may be in the chamber when a magazine is being removed from or inserted into your firearm. A cartridge in the chamber will discharge when the trigger is pulled, whether or not a magazine is in your firearm. NEVER leave your firearm unattended, even when the magazine is removed. You must ALWAYS verify that the chamber is empty before disassembling your firearm for cleaning or any other purpose.

⚠WARNING If an unfired cartridge hangs up, jams, or binds while being chambered, do not attempt to force it into the chamber by pushing or striking the bolt carrier assembly to attempt to close it because this could cause the cartridge to burst, which can result in fragments of the cartridge flying out of the ejection port with sufficient force to cause death, serious personal injury, and/or property damage.

⚠WARNING ALWAYS wear safety glasses when clearing your firearm to protect your eyes and turn the firearm's ejection port away from you. Do not use a metal tool to attempt to remove an unfired cartridge because it could ignite the primer and cause the cartridge to rupture resulting in fragments of the cartridge flying out of the ejection port with sufficient force to cause death, serious injury, and/or property damage.

⚠WARNING NEVER rely solely on a mechanical device or your memory to determine whether your firearm is loaded. ALWAYS remove the magazine, retract and lock the bolt carrier by pulling it fully to the rear and locking it open, and then visually and physically check with your finger to ensure there is not a cartridge in the chamber.

Perform CLEARING THE MRA4 Procedure and ensure selector lever is set on "Safe".

CLEARING THE MR A4

Safety/Selector Lever SAFE position

1. ON SAFE – Point the muzzle in a safe direction with the finger off the trigger and outside the trigger guard. Place the selector on "SAFE". The safe position is indicated by a closed white box containing a bullet symbol with an "X" over it.

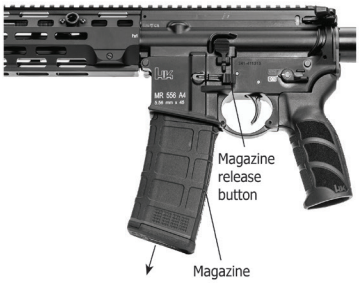

2. REMOVE MAGAZINE - Remove the magazine (if applicable) by depressing the ambidextrous magazine release button located on either side of the lower receiver.

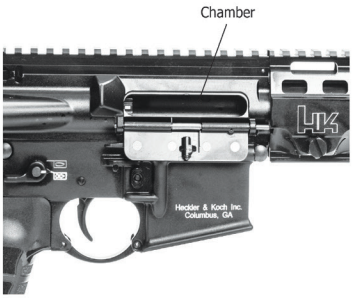

3. RETRACT BOLT – Depress the catch located on the charging handle and rack the bolt to the rear two or three times in quick succession to extract and eject any cartridges that may have been loaded into the barrel.
4. LOCK BOLT TO THE REAR – Lock the bolt to the rear by pulling the charging handle all the way back. Once the bolt reaches its limit of rearward travel, depress the bottom of the bolt catch located on the left hand side of the lower receiver, or by pushing up on the lever on the right hand side of the lower receiver.
5. INSPECT THE CHAMBER – Perform a visual and physical inspection of the chamber area to ensure that no live rounds are present in the firearm prior to disassembly.

6. RETURN THE BOLT TO BATTERY – Depress the grooved paddle (top portion) of the bolt catch on the left side of the lower receiver or press down on the lever on the right side of the lower receiver to disengage the bolt carrier group, allow the action spring to move the bolt all the way forward.

SECTION 5 — DISASSEMBLY & ASSEMBLY

DISASSEMBLY (FIELD STRIPPING) OF THE MR A4

⚠WARNING The firearm is not empty or unloaded until the magazine is removed and the chamber is CLEAR. It is possible that a cartridge may be in the chamber when a magazine is being removed from or inserted into your firearm. A cartridge in the chamber will discharge when the trigger is pulled, whether or not a magazine is in your firearm. Never leave your firearm unattended, even when the magazine is removed. You must always verify that the chamber is empty before disassembling your firearm for cleaning or any other purpose.

⚠WARNING Unload all magazines and remove all live ammunition from the area before disassembling your firearm to reduce the chance of a negligent discharge.

⚠WARNING Never rely solely on a mechanical device or your memory to determine whether your firearm is loaded. Always remove the magazine, retract and lock the bolt carrier assembly by pulling it fully to the rear and locking it open, and then visually and physically check with your finger to ensure there is not a cartridge in the chamber.

⚠WARNING Never alter or modify your MR A4 firearm because this could cause it to malfunction and create a dangerous condition.

⚠WARNING Always wear safety glasses when disassembling your firearm to protect your eyes. Components such as springs are under pressure and could cause serious injury.

1. "CLEAR" the MR A4

a. Point the muzzle in a safe direction with the finger off the trigger and outside the trigger guard.
b. Place the selector lever on "SAFE".

NOTICE **The MR A4 has ambidextrous selector lever/safety levers, the levers are located on both sides of the lower receiver. Either lever can be manipulated and moves the lever on the other side. Unlike many AR-style firearms, the selector lever/safety levers of the MR A4 can be placed on the "SAFE" position even if the MR A4 is not cocked.**

c. Remove the magazine (if applicable) by pressing the magazine release button located on the right-hand side of the lower receiver.
d. Depress the catch located on the charging handle and rack the bolt to the rear two or three times in quick succession to extract and eject any cartridges that may have been loaded into the barrel.
e. Lock the bolt to the rear by pulling the charging handle all the way back. Once the bolt reaches its limit of rearward travel, depress the bottom of the bolt catch located on the lower receiver.
f. Perform a visual inspection of the chamber area to ensure that no live rounds are present in the MR A4 prior to disassembly.
g. Return the bolt to battery (all the way forward) by either depressing the grooved paddle (top portion) of the bolt catch or by slightly pulling back on the charging handle until the bolt catch disengages from the bolt and then allow the buffer spring to move the bolt forward.
h. Do not ride the charging handle forward, allow it to return to battery under force of the buffer spring.

⚠CAUTION Never attempt to disassemble the MR A4 with the bolt locked back to rear. After performing the clearance procedure, always ensure the bolt is forward before attempting to disassemble.

2. Separating the Upper and Lower Receivers:

Push the takedown pin from left to right. Pivot the upper receiver from the lower receiver (Fig. 17). Push the pivot pin from left to right.

Fig. 17 – Pivot the upper receiver from the lower receiver

3. Bolt Assembly:

a. Depress the catch on the charging handle and withdraw the bolt assembly from the rear. Continue to pull the charging handle to the rear until resistance is encountered. Pull down on the charging handle and separate the charging handle from the upper receiver (Fig. 18).

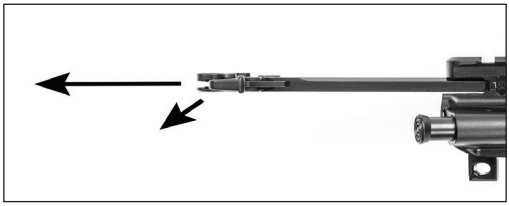

Fig. 18 – Removing the Charging Handle

b. Push the firing pin retaining pin from right to left (Fig. 19).

⚠WARNING The firing pin retaining pin is a captive pin and will therefore remain attached to the bolt carrier. Attempting to completely remove the firing pin retaining pin could lead to damage of the bolt carrier assembly.

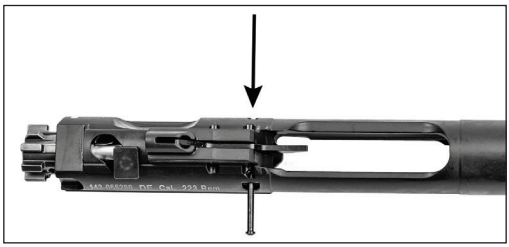

Fig. 19 – Drift out the Firing Pin Retaining Pin

c. Lift up on the spring loaded drop safety and remove the firing pin and firing pin spring (Fig. 20).

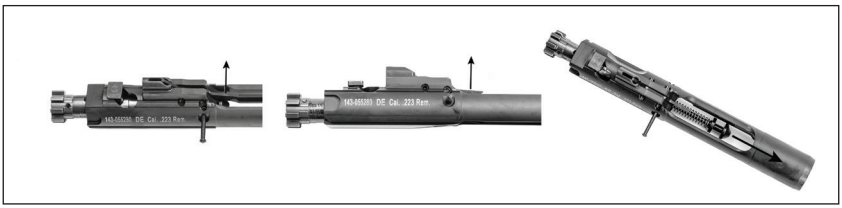

Fig. 20 – Remove the Firing Pin and Firing Pin Spring

d. Lift up and remove the cam pin from the shaft of the bolt head (Fig. 21).

Fig. 21 – Remove the Cam Pin

e. Slide the bolt head from the front of the bolt carrier (Fig. 22).

Fig. 22 – Slide the Bolt Head out

⚠CAUTION Only remove the extractor spring and buffer from the extractor if worn, or damaged. Note that both the extractor spring and buffer features a slight taper to help mount these items onto the extractor. Constant removal and installation of the spring and buffer could lead to decreased service life of these parts and could impair the function of the MR A4.

4. Upper Receiver

a. Insert a 11mm socket or a flat head screwdriver into the retaining screw located on the lower right-hand side of the handguard and rotate counterclockwise (Fig. 23, 24). Once loosened, drift out the retaining screw from left to right until the retaining screw reaches its limit of lateral travel.

⚠WARNING The retaining screw(s) for the handguard is held captive by a small shaped spring located on the lower right-hand side of the handguard. Attempting to completely remove the retaining screw could lead to damage of the handguard, shaped spring, and/or retaining screw.

Fig. 23 – Loosening the screw on MR556 A4 handguard with 11mm wrench

Fig. 24 – Loosening the screws on MR762 A4 handguard with 11mm wrench

b. Slide the handguard off the barrel nut and remove the handguard from the upper receiver.

c. Grasp the rear of the gas piston while pushing back on the piston rod. Disengage the piston rod from the piston and slide out the piston rod from the upper receiver (Fig. 25).

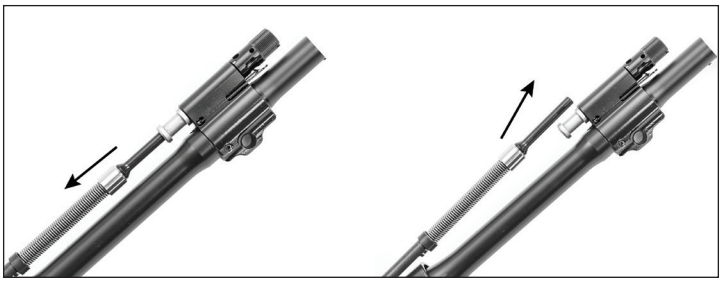

Fig. 25 – Removing Piston Rod

d. Slide the gas piston to the rear and remove the gas piston from the gas block (Fig. 26).

Fig. 26 – Removing Gas Piston

5. Lower Receiver:

NOTICE Always ensure the hammer is in the cocked position (down) before attempting to remove the buffer spring.

a. Depress the buffer retainer and remove the buffer spring from the receiver extension (buffer tube) (Fig. 27).

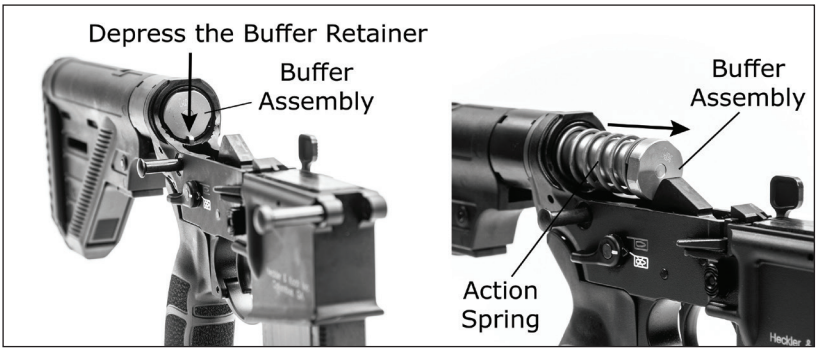

Fig. 27 – Removing Buffer Assembly

The MR A4 is now operator disassembled (field stripped).

NOTICE MR762 A4 and MR556 A4 buttstocks are not interchangeable.

NOTICE Disassembly beyond the above field stripping procedures should only be performed by HK certified personnel.

REASSEMBLY (ASSEMBLY) OF THE MR A4

1. Lower Receiver:

a. Two small set screws are located on the bottom of the receiver extension (buffer tube). These set screws are provided to eliminate any play that may develop between the buttstock and the extension. The left-hand side of the set screw features a detent surface that engages the buttstock. The right-hand surface features a cut to accommodate a small straight slot screwdriver. Rotating the set screws clockwise will tighten the detents to the buttstock; rotating the setscrew counterclockwise will loosen the buttstock. Using a flat head screwdriver, rotate the set screws clockwise using quarter turns and adjust until the detents engage the buttstock but do not hinder removal or installation (Fig. 28)

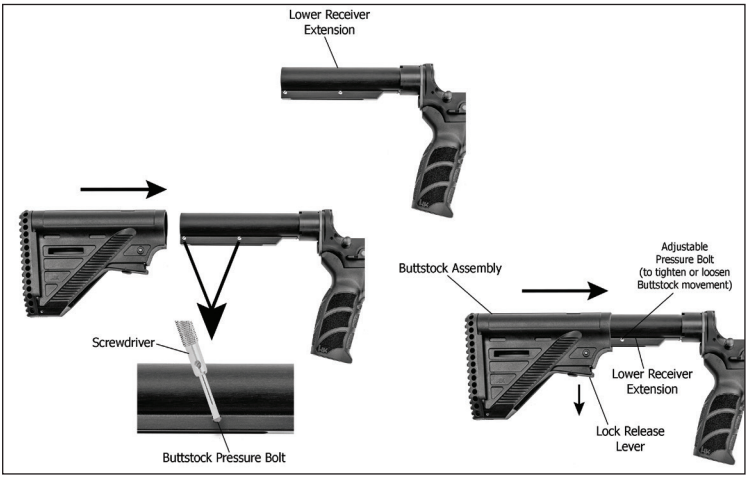

Fig. 28 – Buttstock reassembly

b. Depress the back of the buttstock release lever allowing the front tab to pivot downwards. Pull down on the front tab until the locking pin is not visible inside the buttstock. Mount the buttstock onto the receiver extension.

⚠WARNING Ensure that only the proprietary HK buffer and recoil spring (buffer spring), also marked with red paint, are installed in the MR A4. Use of non HK buffers and recoil springs could result in cycling problems and affect the reliability of the MR A4 (Fig. 29).

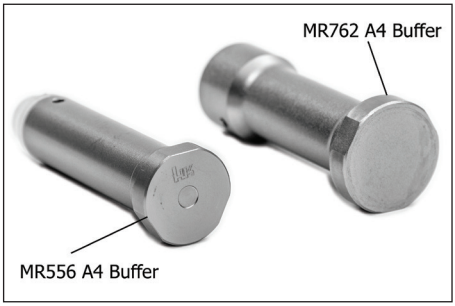

Fig. 29 – MR556 A4 and MR762 A4 Buffers

c. Ensure that the hammer is in the down (cocked) position before attempting to install the buffer spring. Mount the buffer spring onto the buffer and insert the buffer and spring into the receiver extension. Push back on the buffer far enough until the buffer is retained by the spring loaded buffer detent (Fig. 30).

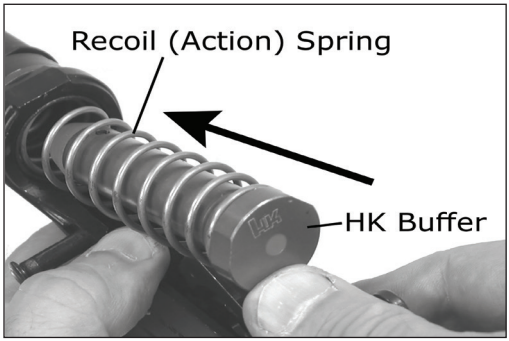

Fig. 30 – Installing the buffer spring

2. Upper Receiver:

a. Install the gas piston into the back of the gas block (Fig. 31).

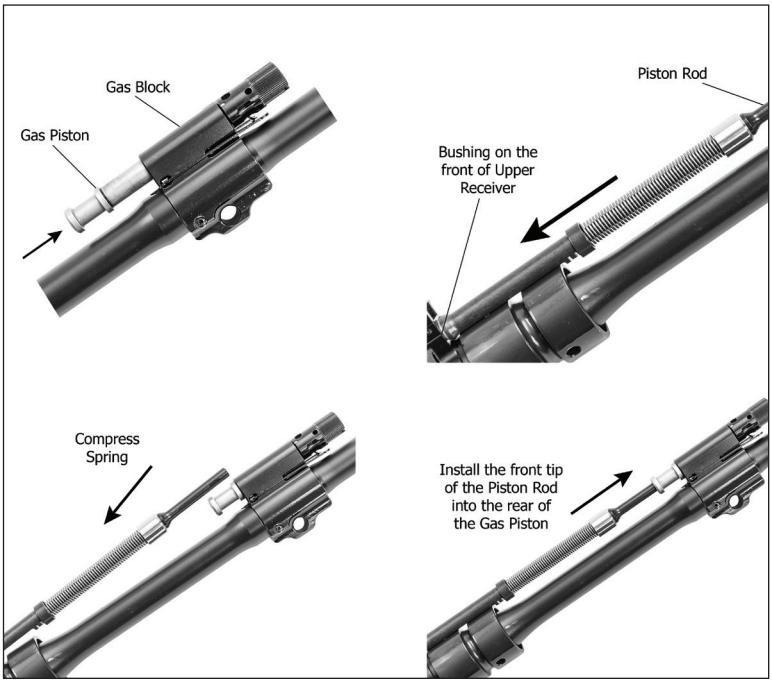

Fig. 31 – Reinstalling the Gas Piston and the Piston Rod

b. Insert the rear of the piston rod into the bushing located at the front of the upper receiver above the barrel nut, compress the spring, and install the front tip of the piston rod into the rear of the gas piston.

c. Slide the handguard onto the barrel nut, ensuring that the tongue on the handguard mounts into the groove on top of the upper receiver. Once the handguard is flush with the upper receiver, drift in the captive handguard retaining screw. Using an 11mm hex wrench or flat head screwdriver rotate clockwise until hand tight (Fig. 32).

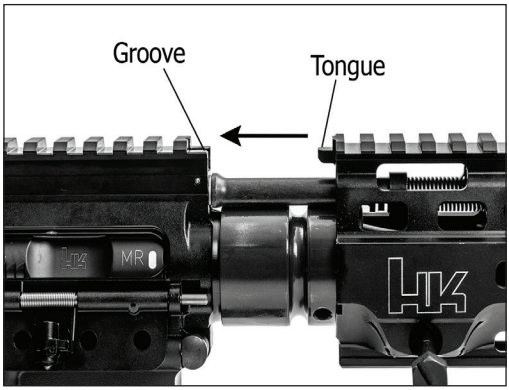

Fig. 32 – Reinstalling the handguard

3. Bolt Assembly:

NOTICE The bolt head on the MR A4 features a tapered mounting surface for the cam pin. This feature ensures that the bolt must be properly positioned in the bolt carrier before attempting to install the cam pin.

a. Slide the bolt head into the bolt carrier until the circular mounting surface for the cam pin on the bolt heads aligns with the front of the raceway on the bolt head carrier. Pointed down range, the extractor should be on the right-hand side of the bolt carrier and ejector should be on the left (Fig. 33).

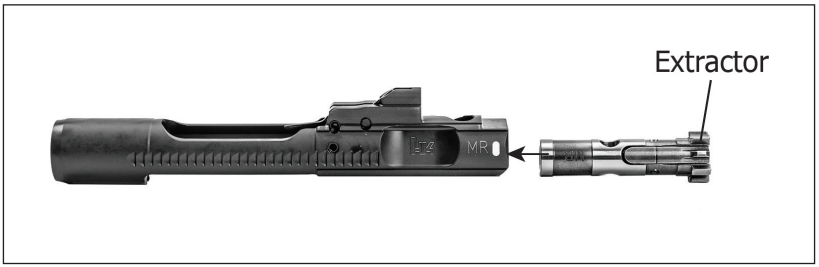

Fig. 33 – Bolt Carrier reassembly

b. Insert the cam pin into the shaft of the bolt carrier, ensuring that the hole for the firing pin on the cam pin is aligned with the firing pin channels on both the bolt head and bolt carrier (Fig. 34).

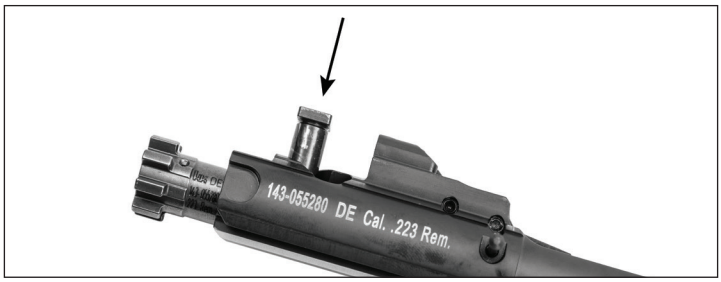

Fig. 34 – Bolt Carrier reassembly

c. Ensure that the captive firing pin retaining pin is drifted completely out to the left-hand side of the bolt carrier. Insert the firing pin spring onto the firing pin, pivot upwards on the spring loaded firing pin safety, and insert the firing pin and spring into the bolt carrier's firing pin channel until the firing pin reaches its limit of forward travel (Fig. 35)

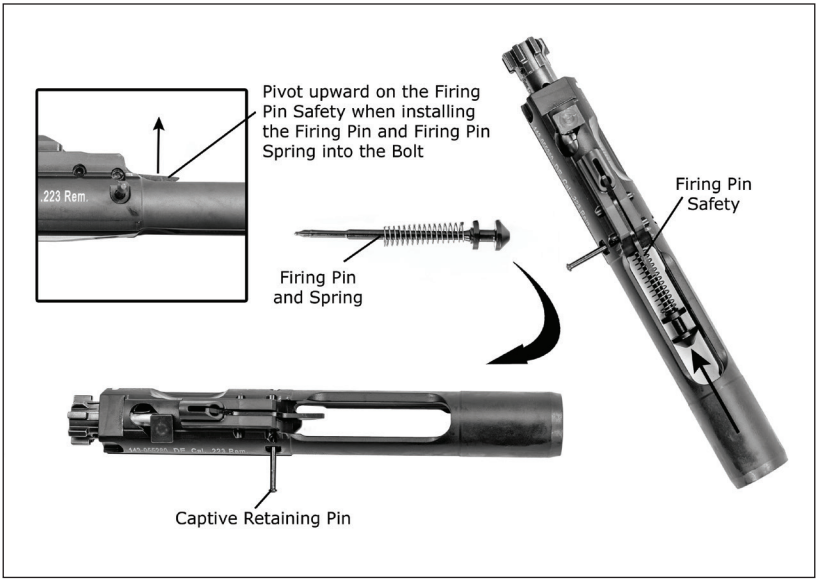

Fig. 35 – Installing the Firing Pin

d. While maintaining forward pressure on the back of the firing pin, drift the firing pin retaining pin from left to right.

e. Ensure that the firing pin retaining pin is properly installed by pivoting upwards on the firing pin safety while pushing backwards on the bolt head. The firing pin should be retained inside the bolt carrier (Fig. 36).

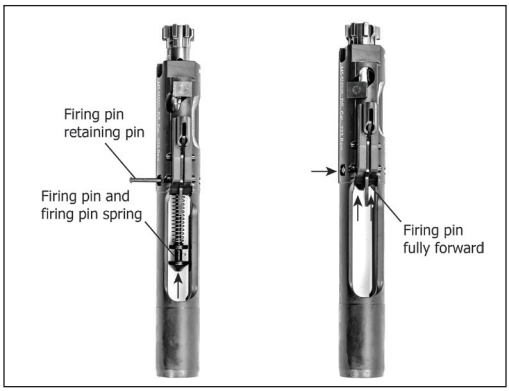

Fig. 36 – Firing Pin Retaining Pin Installation

f. Turn the upper receiver upside down, insert the charging handle into the upper receiver, align the lugs on the outsides of the charging handle with the recesses on the inside of the upper receiver then press down until the charging handle is flush with the inside of the receiver then press slightly forward (Fig. 37).

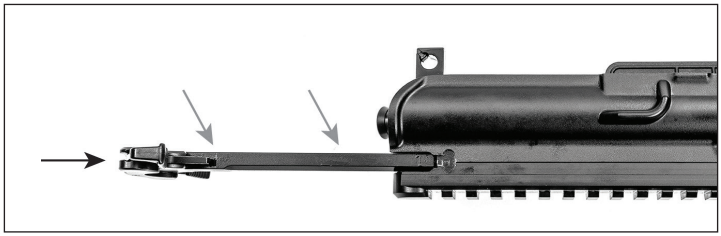

Fig. 37 – Charging Handle Installation

g. With the upper receiver and charging handle upside down, install the bolt assembly onto the bottom of the charging handle ensuring that the bolt carrier's anvil and the top of the cam pin are centered in the bottom cavity of the charging handle (Fig. 38).

Fig. 38 – Installing the bolt carrier assembly into the upper receiver

h. Push the charging handle and bolt group completely into the upper receiver until the locking lugs on the bolt head engage the locking on the barrel extension and the latch on the charging handle engages the oval locking surfaces on either the left or right-hand sides of the upper receiver. The latch is on both the left and right-hand side of the charging handle (Fig. 39).

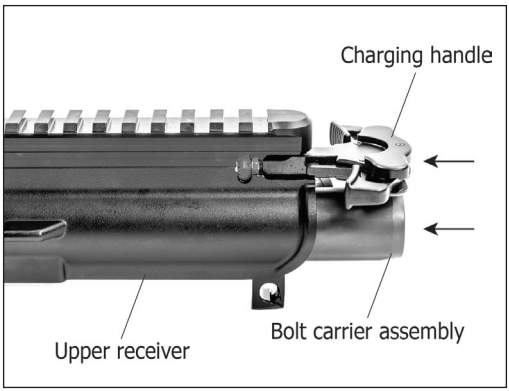

Fig. 39 – Completing installation of the bolt carrier assembly into the upper receiver

4. Upper and Lower Receivers:

a. Ensure that both the captive front pivot pin and rear takedown are drifted out to the right-hand side of the receiver.
b. Place the upper receiver pointed downwards with the muzzle device resting on a padded surface.
c. Mount the lower receiver to the upper receiver. Drift the pivot pin from right to left until the pin reaches its limit of lateral travel. The tip of the pivot pin should be visible on the left-hand side of the lower receiver (Fig. 40).

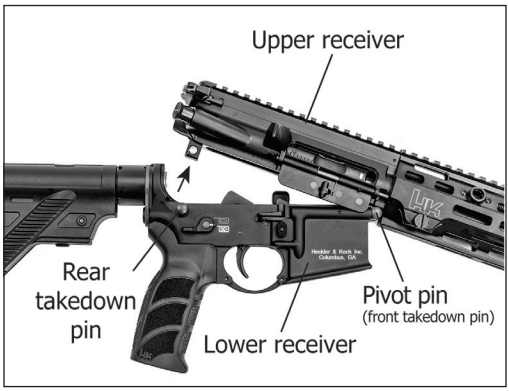

Fig. 40 – Closing Upper and Lower Receiver

d. Drift the rear takedown pin from right to left until the pin reaches its limit of lateral travel. The tip of the rear takedown pin should be visible on the left-hand side of the lower receiver.

If encountering difficulty, please contact HK Customer Service at 706-701-5554 or by email at cs@heckler-koch-us.com.

FUNCTION CHECK

⚠WARNING Always ensure the MR A4 is unloaded prior to attempting to perform a function check.

NOTICE **The MR A4's selector lever can be placed on safe regardless of the position of the hammer.**

FUNCTION CHECK PROCEDURE

1. Perform CLEARING THE MRA4 Procedure and ensure selector lever is set on "Safe".

CLEARING THE MR A4

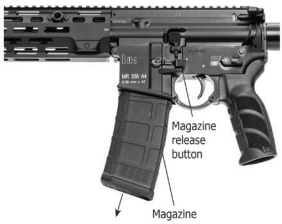

1. ON SAFE – Point the muzzle in a safe direction with the finger off the trigger and outside the trigger guard. Place the selector on "SAFE". The safe position is indicated by a closed white box containing a bullet symbol with an "X" over it.

2. REMOVE MAGAZINE - Remove the magazine (if applicable) by depressing the ambidextrous magazine release button located on either side of the lower receiver.

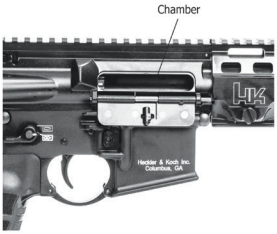

3. RETRACT BOLT – Depress the catch located on the charging handle and rack the bolt to the rear two or three times in quick succession to extract and eject any cartridges that may have been loaded into the barrel.

4. LOCK BOLT TO THE REAR – Lock the bolt to the rear by pulling the charging handle all the way back. Once the bolt reaches its limit of rearward travel, depress the bottom of the bolt catch located on the left hand side of the lower receiver, or by pushing up on the lever on the right hand side of the lower receiver.

5. INSPECT THE CHAMBER – Perform a visual and physical inspection of the chamber area to ensure that no live rounds are present in the firearm prior to disassembly.

6. RETURN THE BOLT TO BATTERY – Depress the grooved paddle (top portion) of the bolt catch on the left side of the lower receiver or press down on the lever on the right side of the lower receiver to disengage the bolt carrier group, allow the action spring to move the bolt all the way forward.

2. Place the muzzle in a safe direction and rack the bolt to the rear three or four times in quick succession by using the charging handle. The bolt should not bind when traveling back and forth in the receiver.

3. "SAFE": Let the bolt go forward and completely go into battery. With an unloaded MR A4 and the muzzle in a safe direction, ensure the selector lever is set on "Safe" and attempt to pull the trigger. The hammer must not fall.

4. "FIRE": Rotate the selector lever to "Semi-Automatic" (Single Shot) and with an unloaded MR A4 and the muzzle in a safe direction, attempt to pull the trigger and hold to the rear. The hammer must fall. 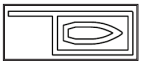

5. While maintaining pressure on the trigger, rack the bolt and release. The hammer should be held by the disconnector.

6. Release the trigger. The hammer should be caught by the sear as signified by a metallic click. Release the trigger completely and re-engage the trigger. Hammer must fall.

7. Insert an empty magazine into the magazine well and pull back on the charging handle. The magazine follower should engage the bolt catch and lock the bolt to the rear on an empty chamber.

8. Remove the magazine and allow the bolt to go into battery, either by depressing the bolt catch or by pulling the charging handle slightly back towards the rear and then releasing.

9. Place the selector lever back on "Safe" and snap the dust cover into position over the ejection port.

If you encounter any problems in attempting to disassemble, assemble, and/or conduct a function check on the firearm, contact the Heckler & Koch Customer Service Department at 706-701-5554 or by email at cs@heckler-koch-us.com.

MAGAZINE DISASSEMBLY

⚠WARNING Unload the magazines and remove all live ammunition from the area before disassembling your magazine.

⚠WARNING Be aware of the force exerted by the magazine spring while removing and installing the magazine floorplate. Always keep the base of the magazine pointed away from the face and eyes of yourself and others. Always wear safety glasses when disassembling your firearm to protect your eyes. Components, such as springs, are under pressure and could cause serious injury.

To disassemble the magazine for cleaning or inspection, push in the locking plate with a cleaning rod, cartridge, or similarly shaped object. As you depress the locking plate through the window of the floorplate, slide the floorplate towards the back of the magazine while keeping pressure on the locking plate (Fig. 41, 42). The floorplate is easily removed from the locking plate, which is attached to the spring and follower. Take note as to the arrangement of these parts for assembly.

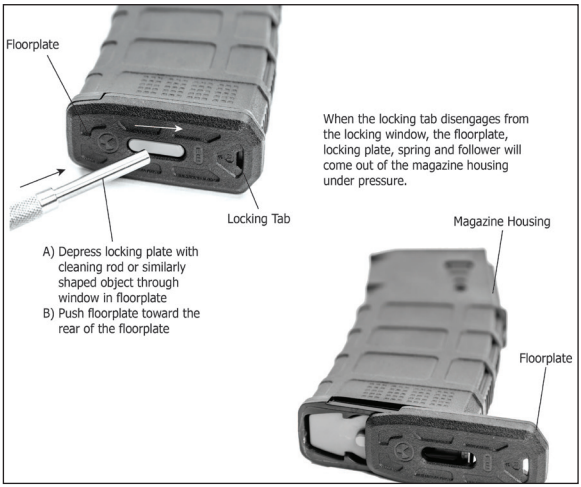

Fig. 41 – MR556 A4 Magazine Disassembly

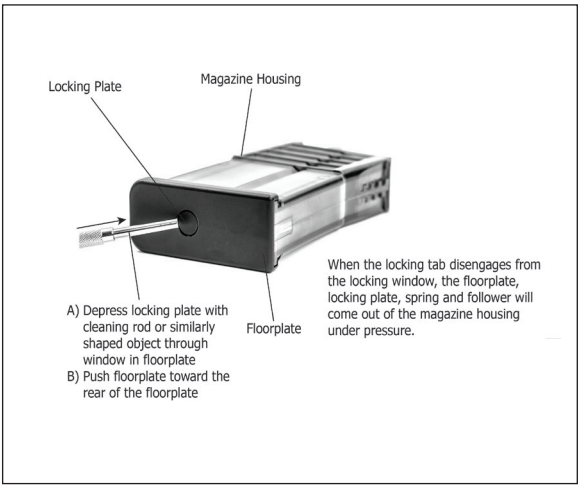

Fig. 42 – MR762 A4 Magazine Disassembly

For cleaning purposes, it is not necessary to disassemble the follower and locking plate from the spring (Fig. 43, 44).

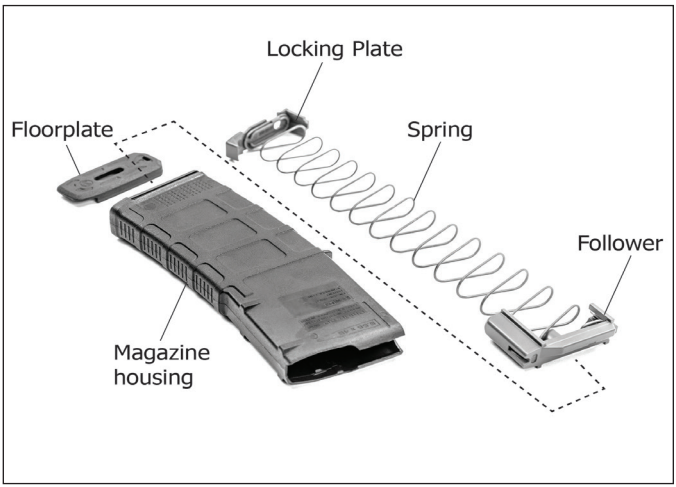

Fig. 43 – MR556 A4 Magazine Components

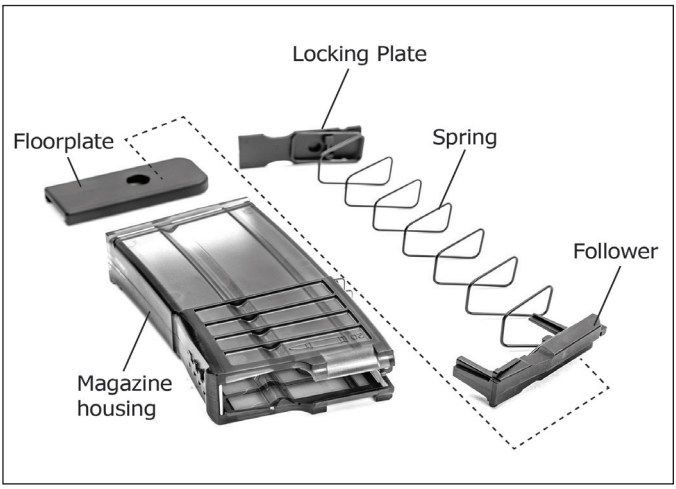

Fig. 44 – MR556 A4 Magazine Components

MAGAZINE ASSEMBLY

⚠WARNING Be aware of the force exerted by the magazine spring while removing and installing the magazine floorplate. ALWAYS keep the base of the magazine pointed away from the face and eyes of yourself and others. ALWAYS wear safety glasses when disassembling your firearm to protect your eyes. Components, such as springs, are under pressure and could cause serious injury.

If the magazine was cleaned, ensure that it is properly lubricated prior to assembly. Attach the follower and locking plate to the spring and slide the follower into the magazine housing (it will only assemble in one direction, do not force it). Push the locking plate down into the housing enough so that you can slide the floorplate into place. The locking tab will enter the recess (locking window) in the middle of the floorplate (Fig. 45, 46).

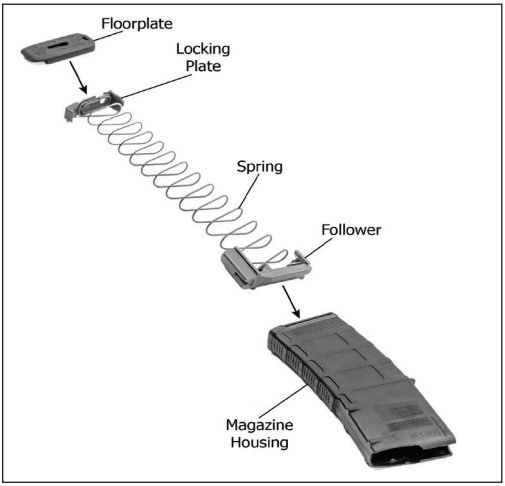

Fig. 45 – MR556 A4 Magazine Assembly

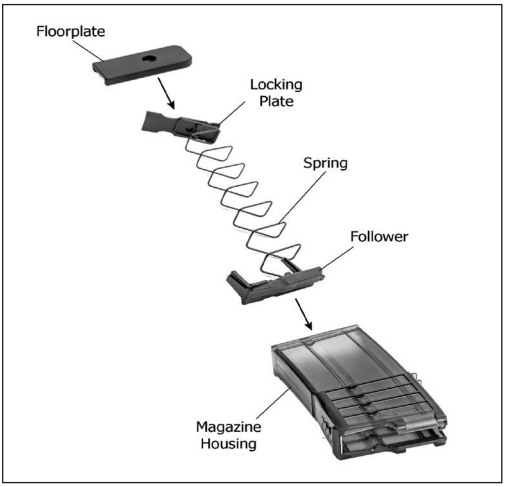

Fig. 46 – MR762 A4 Magazine Assembly

Once the floorplate is assembled, make sure the locking plate is seated flush against the floorplate, by tapping it on your hand. Also check the function of the follower, for free movement by depressing it with the cleaning rod. Lastly, check the secure attachment to and fit of the magazine in the firearm.

NOTICE Do not slam the magazine on a table or a fixed hard surface during filling or damage to the feed lips may occur. Instead apply gradual pressure to accomplish this task.

NOTICE Protect the magazines from drop-induced damage on hard surfaces (concrete, metal, etc.). Many weapon stoppages begin in feed devices that are not properly cared for or that are abused unnecessarily.

If you encounter any problems in attempting to disassemble, assemble, and/or conduct a function check on the firearm, contact the Heckler & Koch Customer Service Department at 706-701-5554 or by email at cs@heckler-koch-us.com.

SECTION 6 — HANDGUARDS

REMOVAL / INSTALLATION OF HANDGUARDS

WARNING Make sure that the firearm is CLEAR (magazine removed and chamber empty) before changing the handguard.

WARNING ALWAYS wear safety glasses when disassembling your firearm to protect your eyes. Components, such as springs, are under pressure and could cause serious injury.

Installing and removing the MR A4 handguard is essentially the same, regardless of the handguard length.

REMOVAL:
Remove the locking screw(s) using an 11 mm / 7/16″ socket or wrench or a flat head screw-driver. Slide the handguard over the barrel. (Fig. 47, 48)

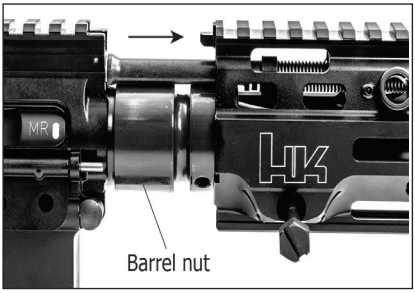

Fig. 47 – Slide the handguard off the barrel nut to remove

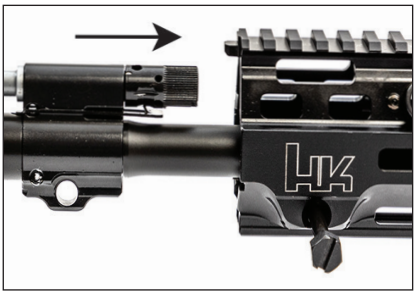

Fig. 48 – Slide the handguard over the barrel to remove

NOTICE MR762 A4 and MR556 A4 handguards are not interchangeable. MR556 A4 models will not fit on 7.62 mm firearms, MR762 A4 models will not fit on 5.56 mm firearms.

INSTALLATION:

1. With the locking screw(s) removed, slide the handguard over the barrel until it engages the barrel nut. (Fig. 49, 50).

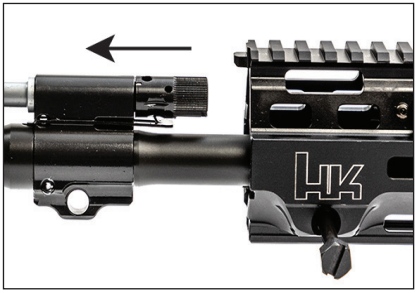

Fig. 49 – Slide the handguard over the barrel to install

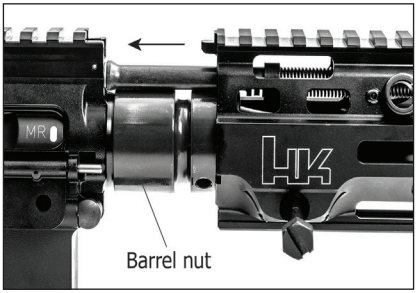

Fig. 50 – Slide the handguard onto the barrel to install

2. Tighten the locking screws. The 11 mm (7/16") hex screws allow a variety of wrenches or screw drivers to be used for installation or removal. DO NOT OVER TORQUE. Do not exceed 70 in-lb (Fig. 51, 52).

Fig. 51 – Tightening the locking screws on the MR556 A4

Fig. 52 – Tightening the locking screws on the MR762 A4

If you encounter any problems in attempting to disassemble, assemble, and/or conduct a function check on the firearm, contact the Heckler & Koch Customer Service Department at 706-701-5554 or by email at cs@heckler-koch-us.com.

SIGHT INSTALLATION

⚠WARNING ALWAYS wear safety glasses when disassembling your firearm to protect your eyes. Components, such as springs, are under pressure and could cause serious injury.

NOTICE **The MR A4 is not shipped with sights included.**

Sights and other accessories can be attached to the top of the firearm's Picatinny rail. Always ensure the firearm is "CLEAR" and unloaded before installing or removing accessories. Clearing procedure can be found on page 6. To avoid damage to the accessory and the firearm, carefully follow the instructions of the manufacturer for installing, operating, and removing accessories from the mounting rails.

SECTION 7— CLEANING & MAINTENANCE

CLEANING

⚠WARNING ALWAYS be sure that the barrel of your firearm is clear of obstructions before firing. If any obstruction is found, remove it – including any excess lubricants – before firing so that your firearm will function safely and correctly. Any obstruction in the barrel could prevent the firearm from firing properly and result in death or serious personal injury, and/or damage to the firearm.

⚠WARNING The firearm is not EMPTY or unloaded until the magazine is removed and the chamber is CLEAR. It is possible that a cartridge may be in the chamber when a magazine is being removed from or inserted into your firearm. A cartridge in the chamber will discharge when the trigger is pulled, whether or not a magazine is in your firearm. NEVER leave your firearm unattended, even when the magazine is removed. You must ALWAYS verify that the chamber is empty before disassembling your firearm for cleaning or any other purpose.

⚠WARNING ALWAYS wear safety glasses when cleaning your firearm to protect your eyes from cleaning solutions and components, such as springs, which are under pressure and could cause injury. Exercise caution if using compressed air.

⚠WARNING ALWAYS ensure that no ammunition is in the area where you clean your firearm. Lubricants can affect the primer and powder in ammunition and cause it to malfunction. This could result in failure to fire, or in a bullet being pushed into the barrel of your firearm and becoming stuck, which could cause the barrel to burst and result in death or serious injury, in addition to damaging the firearm.

⚠WARNING Do not alter any of the parts or components of the firearm or magazine, e.g., do not attempt to "improve" or make the firearm "better" by altering parts or components. Altering any parts or components of the firearm or magazine may cause serious injury or death, damage to the firearm, or other damage to property, and voids its warranty.

⚠WARNING As with any semi-automatic firearm, your MR A4 should be disassembled into its major components every time it is cleaned. Failing to do so, by merely locking the bolt carrier assembly to the rear and inserting the cleaning rod from the muzzle, can cause dirt, oil, and lubricant to build up inside the firearm causing malfunctions.

⚠WARNING Do not use a steel bore brush which can scratch the polygonal bore and reduce accuracy.

⚠WARNING Use of ultrasonic cleaning machines can result in the unwanted removal of colored reference markings of the frame assembly, extractor and control lever (where applicable). Use of ultrasonic cleaning is normally not necessary or recommended when using standard ammunition in HK firearms. All components should be thoroughly dried after being coated in cleaning solutions of any kind before reassembly and all the firearm critical components should be lubricated in accordance with the applicable operator/maintenance instructions after being thoroughly dried.

There are no special requirements, cleaners, or lubricants required for cleaning the MR A4. Cleaning may be completed using dry cleaning solution, bore cleaner, wiping with a cloth or an all-purpose nylon brush. Using these guidelines will determine which applies. Cleaning materials are pipe cleaners, swabs, all-purpose nylon brush and rags.

NOTICE **If a cleaning solution is used for cleaning, ensure all residual solution is removed after cleaning, and then a coat of lubricant must be applied for protection against rust and the elements.**

General Cleaning is required under normal conditions and the following procedures apply.

1. Always clean the firearm after firing or if exposed to adverse weather conditions. Remove areas of powder fouling, debris and grit, corrosion and dirt. Clean the bore with a bore brush and a cable cleaning rod. Pull the brush from the chamber to the muzzle. Complete this several times with bore cleaner and let soak several minutes if time permits. Clean the chamber with the chamber brush and a solid cleaning rod handle. Rotate the chamber brush with bore cleaner by pushing and twisting and also let it soak for several minutes while the upper receiver, piston, piston rod and bolt carrier assembly are cleaned with the all-purpose brush using bore cleaner. Wipe excess cleaner off with a rag and then run several patches through the bore with the cable rod from the chamber to the muzzle until there is no residue on the patch.

2. Use an all-purpose nylon brush or swab and apply a light coat of lubrication to all interior metal surfaces, including the bore, the locking lugs in the chamber and on the bolt. A drop of oil should be placed on the ejector, extractor, cam pin, trigger pin, hammer pin, charging handle spring and forward assist.

3. All parts should be thoroughly cleaned, lubricated and inspected before assembly.

LUBRICATION
All firearms require proper lubrication to function as designed and the MR A4 is no exception. Absence of lubrication may impede the operation of the MR A4, particularly in load-bearing or friction contact areas. Excessive lubrication may also cause function problems by acting as a magnet for dirt, grit, sand, and fouling. Use a high quality, medium weight lubricants (oils) specifically designed for use on firearms. Do not use lubricants that boast of their ability to penetrate metal as these substances may deaden cartridge primers.

UPPER RECEIVER
Apply a light coat of a suitable lubricant to the interior of the upper receiver, bore and chamber, barrel nut, outer surfaces of barrel, surfaces under handguard and forward assist.

1. Apply a medium coat of lubricant on the gas piston and operating rod (Fig. 53)

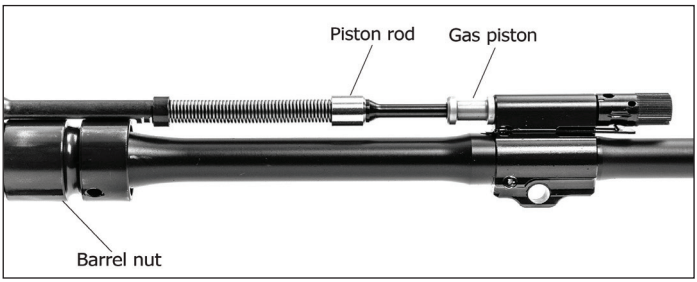

Fig. 53 – Lubrication of the Gas Piston, Piston Rod, and Barrel Nut Exterior

2. Apply a light coat of lubricant to the extractor pin, the firing pin, firing pin spring, firing pin recess in the bolt. Apply a medium coat of lubricant to the red areas (Fig 54).
3. Apply a medium coat of lubricant to the extractor (Fig. 54).

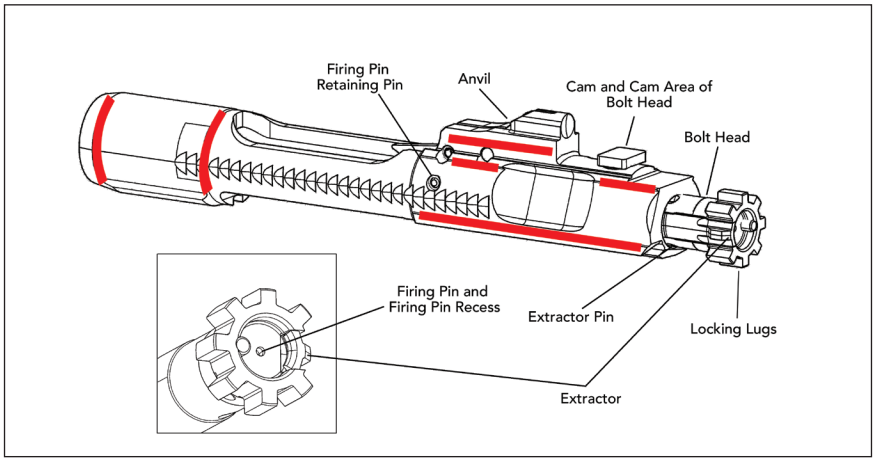

Fig. 54 – Lubrication of the MR A4 Bolt Carrier Assembly

4. Apply a meduim coat of lubricant to the exterior of the bolt carrier, outside of the firing pin retaining pin, cam pin, and bolt head. Pay special attention to cam pin area inner and outer surfaces of bolt carrier, anvil, and bolt head's locking lug.

5. Apply a medium coat of lubricant to the interior and exterior surfaces of the charging handle (Fig. 55).

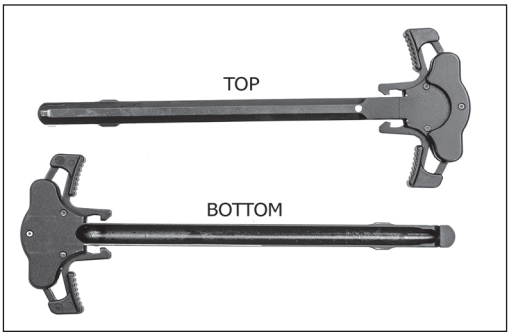

Fig. 55 – Lubrication of MR A4 Charging Handle

LOWER RECEIVER ASSEMBLY (FIG. 56 & 57)

1. Apply a light coat of lubricant to the exterior of the receiver and receiver extension (buffer tube), interior of the exterior metallic surfaces, exposed pins, and magazine springs.

2. Apply a medium coat of lubricant to takedown pins, pivot pins, detents, inside the buffer extension tube, buffer detent pin, springs inside the lower receiver, trigger mechanism, hammer, disconnector, and sear inside the lower receiver.

3. Apply a medium coat of lubricant on the (recoil) buffer spring and buffer.

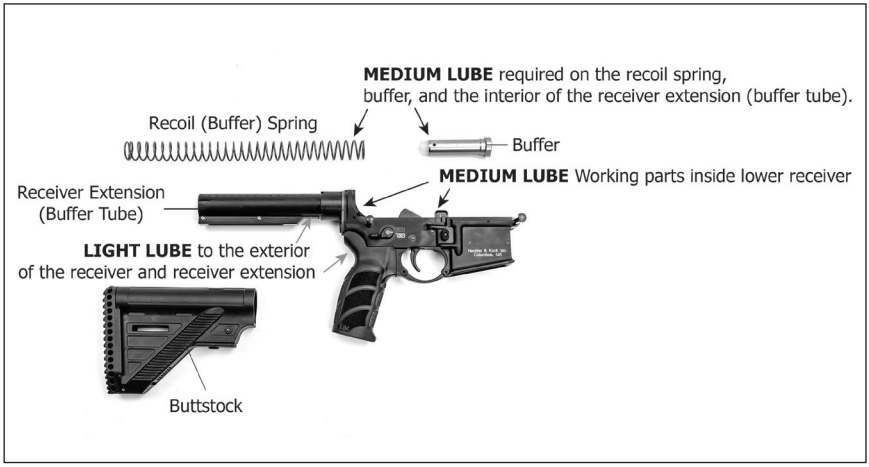

Fig. 56 – Lubrication of MR A4 Lower Receiver Assembly

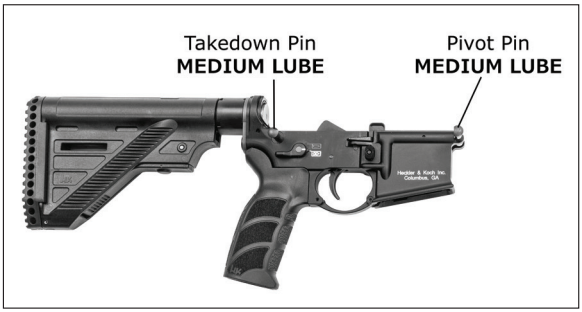

Fig. 57 – MR A4 Buttstock Assembly

Where and How Much -
No Lube - Surface is dry and not slippery to the touch.
- All plastic and rubber components
- Ammunition
- Electronics

Light Lube - A finger run across the surface yields little or no lube.
- Exterior of barrel
- All metal parts
- All internal parts in slide and frame assembly
- Magazine spring
- Recoil spring assembly
- Trigger spring
- Magazine tubes

Medium Lube - A finger run across the surface yields some lube, but lube does not run down the surface when it is held in a vertical position.

- Barrel locking block
- Slide rails and grooves
- All interior operating controls
- Extractor
- Sear

Magazine Cleaning

There are no special requirements, cleaners or lubricants for cleaning this magazine. The standard cleaning equipment that is used for the firearm may be used for this magazine. Do not use metal bristle (brass or steel) or wire brushes to clean the magazine components as damage may occur to the protective qualities of the surface finish.

NOTICE **If cleaning is completed using a cleaning solution, then a coat of lubricant must be applied for protection against rust and the elements.**

General cleaning is required under normal conditions and the following procedures apply:

1. Always clean after firing, after magazine is wet or in adverse weather conditions. Remove areas of powder fouling, debris and grit, corrosion and dirt.

2. If the magazine is assembled, clean carbon off of the follower and feed lips with the all-purpose nylon brush or swab and apply a light coat of lubrication with a clean swab.

3. If the magazine has been disassembled, then all parts should be thoroughly cleaned before assembly.

NOTICE **Do not mix lubricants on the same magazine. The magazine must be thoroughly cleaned during the change from one lubricant to another.**

Inspection of Firearm and Magazine

A visual inspection is recommended each and every time you clean the firearm or disassemble the magazine. Special care should be taken to inspect magazines as many malfunctions are directly attributed to the magazine. The following are guidelines that can help in identifying and solving magazine related problems.

Many problems are very often related to incorrect operator use or maintenance, faulty ammunition and/or problems in the weapon. These areas should be checked for problems at the same time the magazine is inspected. If the same problem exists with more than one magazine, then more than likely it is a firearm, operator or ammunition problem. When problems do occur, mark/identify the suspect magazine with a tag or paint/grease pen and use the following as a guideline. Check for proper assembly. Inspect overall function of follower (free movement), locking tabs, dents, cracks, etc.

1. **Housing:** Inspect feed lips for dents and proper spacing, sides for dents, magazine catch area for worn surfaces or dents, cracks, etc.
2. **Follower:** Inspect for free movement inside of housing, dents, cracks and deformities.
3. **Spring:** Inspect for bends, cracks, weak tension.
4. **Locking Plate:** Inspect for worn or broken tabs. It should retain the floorplate and stay securely attached to the spring.
5. **Floorplate:** Inspect for bends, cracks and correct fit of the locking tabs into the locking recess of housing.
6. **Locking plate:** Ensure locking plate retains floorplate into housing when assembled and there are no signs of extreme wear.

If any problems are identified, repair or replace as necessary.

NOTE: If after reviewing this manual you still have questions, please contact HK Customer Service at 706-701-5554 or by email: cs@heckler-koch-us.com.

STORAGE AND TRANSPORT

⚠WARNING The firearm is not EMPTY or unloaded until the magazine is removed and the chamber is CLEAR. It is possible that a cartridge may be in the chamber when a magazine is being removed from or inserted into your firearm. A cartridge in the chamber will discharge when the trigger is pulled, whether or not a magazine is in your firearm. NEVER leave your firearm unattended, even when the magazine is removed. You must ALWAYS verify that the chamber is empty before disassembling your firearm for cleaning or any other purpose.

⚠WARNING Firearms should be locked and stored unloaded, secured, and separately from ammunition in a suitable container out of the sight and reach of children and/or any unauthorized individuals.

⚠WARNING NEVER store or transport ammunition in the same container as your firearm.

⚠WARNING NEVER rely solely on a mechanical device or your memory to determine whether your firearm is loaded. ALWAYS remove the magazine, retract and lock the bolt carrier assembly by pulling it fully to the rear and locking it open, and then visually and physically check with your finger to ensure there is not a cartridge in the chamber.

1. Store or transport the firearm and its components clean and lubricated.
2. Store and transport the firearm without cartridges in the chamber, magazine, or in the storage container and with the magazine removed.
3. Store and transport the firearm with the bolt carrier assembly in the forward (closed) position.
4. Clean and lubricate the firearm and its components at least every twelve (12) months during storage.
5. HK recommends storage in a climate controlled, room temperature environment.
6. Store the firearm and ammunition separately under lock and key.

SECTION 8 — TROUBLESHOOTING PROBLEMS AND REPAIR

This section contains operator level troubleshooting information for locating and correcting most of the operating troubles which may develop in the MR A4 Series. Each malfunction for the individual part or assembly is followed by a list of tests or inspections which will help you to determine the corrective actions in the order listed. This manual cannot list all malfunctions that may occur, or all tests or inspections and corrective actions.

If a malfunction is not listed or is not corrected by listed corrective actions, please contact Heckler & Koch Customer Service Department at 706-701-5554 or by email at cs@heckler-koch-us.com. The symptom index is provided for a quick reference of the malfunctions covered in the table. The MR A4 must always be treated as if loaded until the stoppage has been cleared. The following list does not include all potential causes and/or corrective actions. Other causes than those indicated below may be encountered.

Malfunction	Probable Cause	Corrective Action
Failure of Magazine to lock in rifle.	Dirty or corroded magazine catch.	Disassemble and clean.
	Worn or broken magazine catch.	Contact HK Customer Service.
	Defective magazine catch spring.	Contact HK Customer Service.
Failure to feed.	Short recoil.	Refer to short recoil.
	Magazine catch spring weak or broken.	Contact HK Customer Service.
	Magazine catch defective.	Contact HK Customer Service.
	Magazine improperly filled.	Remove rounds and reinsert.
Failure to chamber.	Short recoil.	Refer to short recoil.
	Weak or broken recoil spring.	Contact HK Customer Service.
Failure to lock.	Improperly assembled extractor spring assembly.	Assemble correctly.
	Bolt cam pin missing.	Contact HK Customer Service.
	Bent piston rod.	Contact HK Customer Service.
	Weak or broken recoil spring.	Contact HK Customer Service.
Failure to fire.	Carbon buildup in firing pin recess inside bolt assembly.	Remove firing pin & clean recess with pipe cleaner. Refer to operators manual under cleaning.
	Broken or chipped firing pin.	Contact HK Customer Service.
	Broken, defective, or missing firing pin retaining pin.	Contact HK Customer Service.
	Firing mechanism and or lower receiver improperly assembled or has been worn, broken or missing parts.	Contact HK Customer Service.
Failure to unlock.	Short recoil.	Refer to short recoil.
	Burred locking lugs on bolt assembly.	Contact HK Customer Service.
	Burred lugs on barrel extension.	Contact HK Customer Service.

Malfunction	Probable Cause	Corrective Action
Failure to extract.	Defective extractor pin, extractor, and/or extractor spring assembly.	Contact HK Customer Service.
Failure to eject.	Short recoil.	Refer to short recoil.
	Ejector stuck in bolt body.	Contact HK Customer Service.
	Broken ejector.	Contact HK Customer Service.
	Weak or broken ejector spring.	Contact HK Customer Service.
Failure to cock.	Short recoil.	Refer to short recoil.
	Worn, broken or missing parts of firing mechanism.	Contact HK Customer Service.
Short recoil.	Unlubricated or dirty recoil spring and receiver extension.	Clean and lubricate.
	Broken or damaged recoil spring.	Contact HK Customer Service.
	Worn, missing, or broken piston rings.	Contact HK Customer Service.
	Incorrect gas adjustment setting	Set in suppressed setting with no suppressor
	Incorrect , defective, under powered ammunition	Use new factory ammunition of the appropiate caliber
Rifle cannot be zeroed.	Substandard, poor quality or incorrect ammunition	Retry with match grade ammunition
	Defective barrel assembly. Barrel assembly out of alignment with upper receiver. Loose barrel.	Contact HK Customer Service.
Fires with selector lever on SAFE or when trigger is released on SEMI-AUTO	Worn, broken or missing parts of firing mechanism.	Contact HK Customer Service.
Bolt assembly fails to lock to rear after firing last round.	Magazine improperly inserted.	Remove and reinsert magazine.
	Magazine lips bent or broken.	Replace magazine.
	Magazine follower binds during operation.	Replace magazine.
	Magazine follower worn or broken.	Replace magazine.
	Magazine catch spring weak or broken.	Contact HK Customer Service.
	Broken bolt catch and/or spring.	Contact HK Customer Service.
Magazine follower binds during operation.	Magaine housing dented. Magazine improperly loaded.	Replace Magazine. Remove rounds and reinsert.

SECTION 9 — MR556 A4 EXPLODED DIAGRAM AND PARTS LIST

PARTS LIST MR556 A4

Item	Description	Part Number
—	MR556 A4 Firearm	N/A
—	Upper receiver, complete (Item 1-40)	81000077
—	Barrel 16,5”, complete (Item 1-5)	51001853
1	Flash hider	51000057
2	Gas block	50237094
3	Clamping sleeve	50979245
4	Barrel nut	50236304
5	Barrel MR556 A4 16.5”, assembled	51001868
6	Gas piston, complete	50205381
7	Rod, complete	50203648
8	Upper receiver, assembled	50257784
9	Axle for cover	50203633
10	Ejection port cover	50203626
11	Clamping sleeve (roll pin)	50979290
12	Elbow spring	50203632
13	Clamping sleeve for forward assist	50979313
14	Pressure spring for forward assist	50203635
—	Forward assist, complete (Item 15-19)	50203599
15	Pressure bolt for forward assist	50203637
16	Pressure spring for pressure bolt	50203636
17	Locking piece for forward assist	50203601
18	Pressure bolt for locking piece	50979293
19	Retainer, compl.	50203600
20	Charging handle, complete	50256013
21	Handguard 13.4”, complete (21 & 22)	51001176
22	Locking screw for handguard	51000065
23	Bolt group, complete (Item 23-44)	51000978
24	Bolt head, complete (Item 24-32)	235604
25	Ejector	50233109
26	Pressure spring	50233110
27	Cylindrical pin	50203569
28	Bolt head	235605
29	Rubber plug	50207779
30	Pressure spring	50205407
31	Extractor	50233108
32	Clamping sleeve (roll pin)	50236320
33	Control bolt	50233112
34	Bolt head carrier, complete (Item 34-42)	235236
35	Pressure spring	50233674
36	Catch	50233705
37	Rivet	50233706
38	Clamping sleeve (roll pin)	50984198
39	Compression spring	50235022
40	Bolt	50235238
41	Pin	50235239
42	Bolt head carrier	236267
43	Pressure spring	50233674
44	Firing pin	50233703
—	Lower receiver, complete (Item 45-85)	N/A
45	Buffer, complete	50203570
46	Recoil spring (buffer spring)	50233166
—	Lower receiver, assembled	N/A
47	Takedown detent pin	50233115
48	Pressure spring	50233116
49	Pivot pin, front	50233114
50	Hammer	51000060
51	Hammer, spring	50233145
52	Hammer, washer	50235628
53	Axle for hammer	50227886
54	Disconnector	51000192
55	Disconnector spring	50235000
56	Sear release rocker	50235731
57	Sear spring	50233149
58	Bridge	50203593
59	Trigger	50235732
60	Axle for Trigger	50227886
61	Bolt catch/release	50237090
62	Clamping sleeve (roll pin) for bolt catch/release	50979292
63	Pressure spring for pressure pin	50233132
64	Pressure pin	50233131
65	Magazine catch	50237323
66	Pressure spring	50233127
67	Retainer for magazine catch	50233127
68	Clamping sleeve	50975415
69	Ambi Safety, complete (69 a,b,c)	51001179
70	Buffer retainer spring	50233121
71	Locking pin for buffer (buffer detent)	50233120
72	Locking pin clamping sleeve	50986544
73	Trigger guard	50237387
74	Clamping sleeve for trigger guard (2x)	50979294
75	Safety detent	50236687
76	Pressure spring for safety detent	50233136
77	Firearm grip, complete	51001344
78	Grip screw	50979522
79	Rear takedown pin	50233117
80	Stop pin for locking pin	50233115
81	Pressure spring	50233116
82	Back plate	50257609
83	Nut for extension	236733
84	Buffer tube	50236272
85	Slim line buttstock	50236720
86	Gas regulator	50250190
87	Leaf spring	50237357
88	Lower receiver	51000761
89	Safety axle	50255653

MR A4 11” Model

86	Upper receiver, complete	51000385
87	Barrel 11”, complete	51001863
88	Handguard 10”, complete	51001177

Accessories

89	Gen 3 Pmag	51001115
—	HK steel 30 round steel magazine	251770S
—	HK steel 20 round polymer magazine	233609S
—	HK steel 10 round polymer magazine	235642S
—	Cable lock	701930
—	42” rifle bag	51000082
—	Tool kit	988496

Parts and accessories are available online at us.hkwebshop.com or by contacting HK Customer Service at 706-701-5554.

Every attempt has been made to ensure the accuracy of this information, however errors or changes may occur.

This page intentionally left blank.

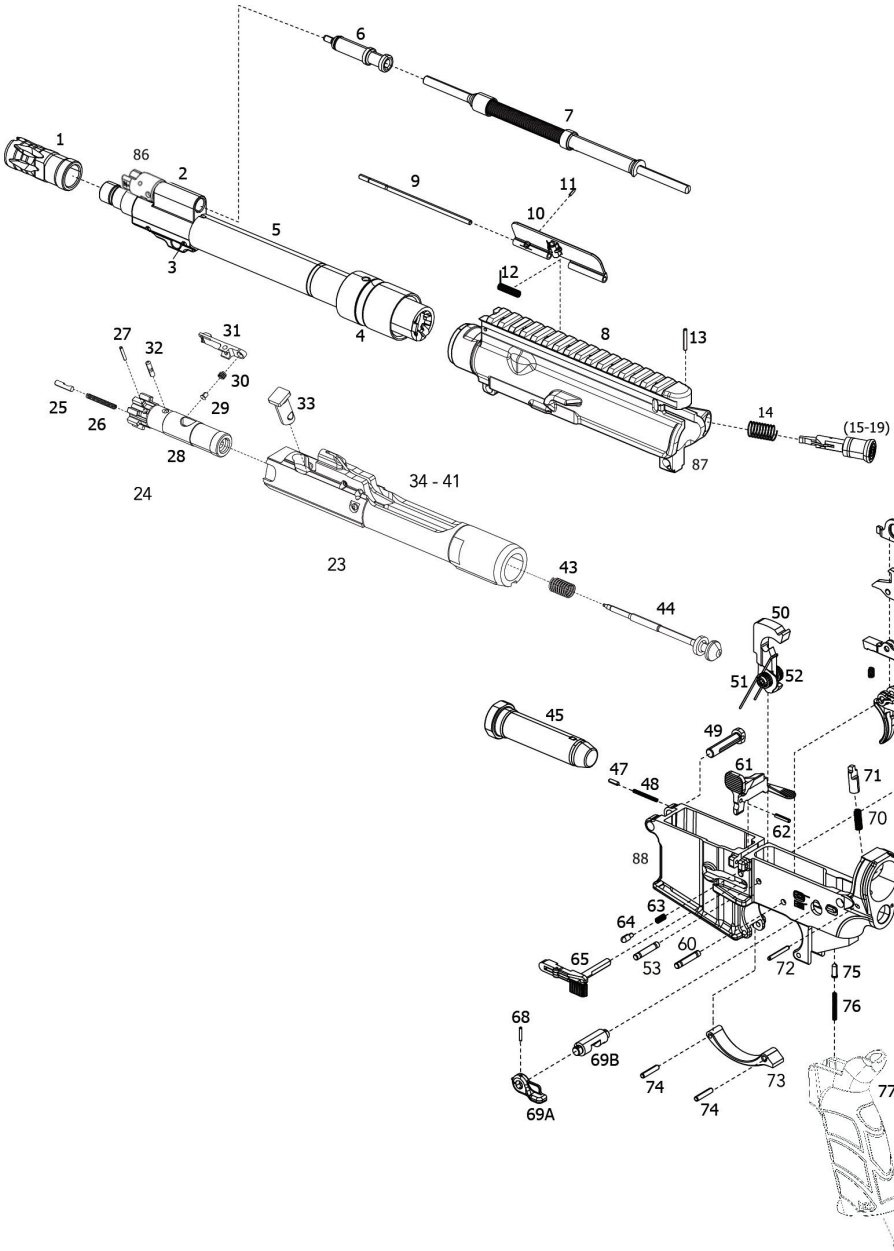
6
7
1
86
2
9
11
10
5
3
12
4
8
13
27
31
32
30
25
26
29
33
14
(15-19)
28
87
34 - 41
24
23
43
44
50
51
52
45
49
47
48
61
71
70
62
88
63
64
60
65
53
72
75
76
68
69B
74
73
77
69A
74

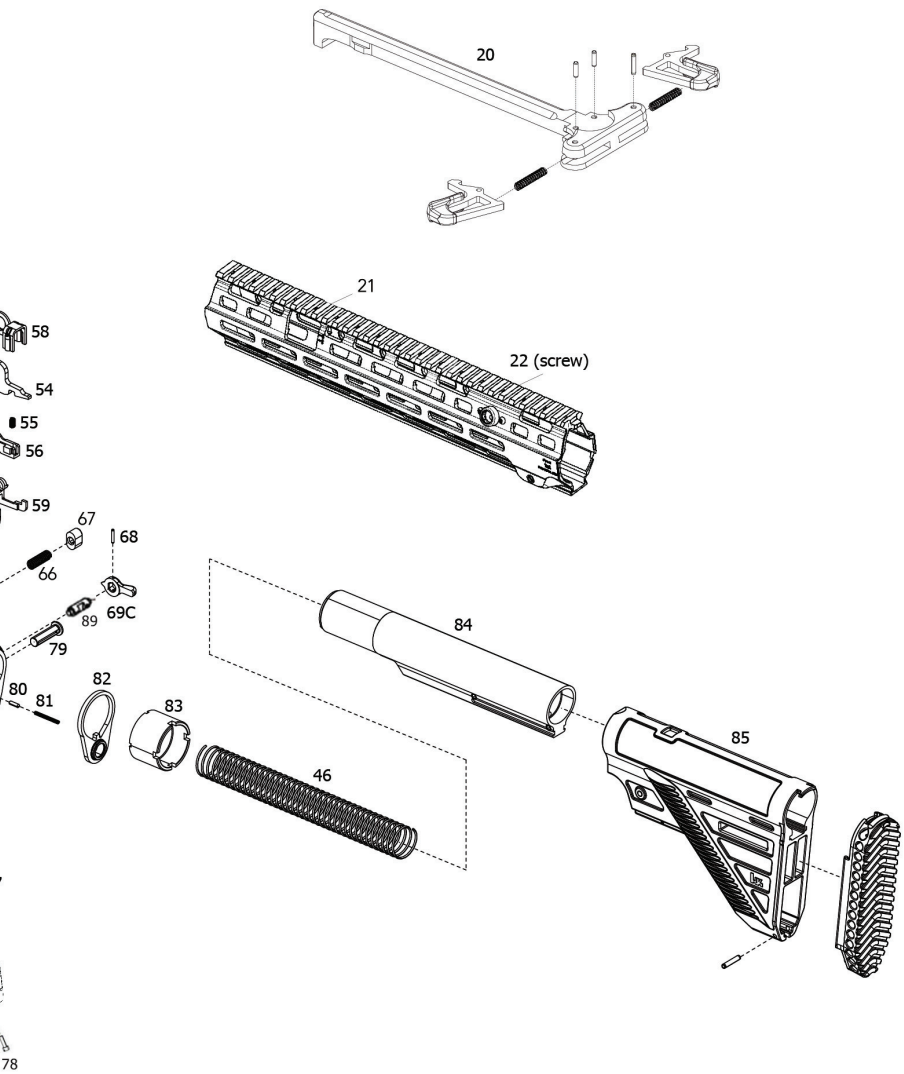
20
21
22 (screw)
58
54
55
56
59
67
68
66
69C
89
79
80
81
82
83
84
85
46
78

PARTS LIST MR762 A4

Item	Description	Part Number
—	MR762 A4 Firearm	N/A
—	Upper receiver, compl. (Item 1 - 19)	N/A
—	Barrel MR762 16.5", compl. (Item 1 - 5)	51001853
1	Flash hider, compl.	51001066
2	Gas block	N/A
3	Clamping sleeve for gas block	N/A
4	Barrel nut	50233791
5	Barrel MR762 A4 16.5"	51001853
6	Gas piston, compl.	50205381
7	Rod, compl.	50203648
8	Upper receiver	51000979
9	Axle for cover	50233787
10	Ejection port cover, compl.	233808
11	Clamping sleeve	50928807
12	Elbow spring	50235012
13	Clamping sleeve for forward assist	50979313
14	Pressure spring for forward assist	50203635
—	Forward assist, compl. (Item 15-19)	50203599
15	Pressure bolt for forward assist	50203637
16	Pressure spring for pressure bolt	50203636
17	Locking piece for forward assist	50203601
18	Pressure bolt for locking piece	50979293
19	Retainer, compl.	50203600
20	Charging handle, compl.	50257600
21	Handguard, compl. (Item 21-22))	51001178
22	Locking screw for handguard (2x)	51000065
23	Bolt group, compl. (Item 23-27)	50236591
24	Bolt head, compl.	50236592
25	Bolt head carrier, compl.	50236297
26	Pressure spring for firing pin	50233674
27	Firing pin	50235654
—	Lower receiver, compl. (Item 28-71)	N/A
28	Buffer, compl.	50233777
29	Recoil spring	50233760
—	Lower receiver, assembled	N/A
30	Stop pin for locking pin	50233115
31	Pressure spring	50233116
32	Pivot pin	50233794
33	Cylindrical pin for stop pin	50978316
34	Hammer	51000061
35	Hammer, spring	50233145
36	Hammer, washer	50235347
37	Axle for hammer	50235346
38	Disconnector	51000192
39	Disconnector spring	50233149
40	Sear release rocker	50235731
41	Pressure spring	50235000
42	Bridge	50203593
43	Trigger	50235732
44	Axle for trigger	50227886
45	Bolt catch/release	50237407
46	Clamping sleeve for bolt catch/release	50979292
47	Pressure spring for pressure pin	50233132
48	Pressure pin	50233131
49	Magazine catch	50237410
50	Pressure spring for retainer	50233716
51	Retainer for magazine catch	50233793
52	Clamping sleeve for retainer	50928077
53	Clamping sleeve for safety lever (2x)	50975415
54	Safety Lever, left	50256571
55	Safety Lever, right	50256572
56	Buffer retainer spring	50233121
57	Locking pin for buffer	50233120
58	Clamping sleeve for locking pin	50986544
59	Trigger guard	50233153
60	Clamping sleeve for trigger guard	50979294
61	Safety detent	50236687
62	Pressure spring for safety detent	50233136
63	Firearm grip	51001344
64	Grip screw	50979522
65	Rear takedown pin	50233117
66	Stop pin for locking pin	50233115
67	Pressure spring	50233116
68	Back plate	50253787
69	Nut for extension	50236544
70	Buffer tube	50255942
71	Slim line buttstock concave	50237580
72	Gas regulator	50236666
73	Leaf spring	50237357
74	Lower receiver	51000762
75	Safety axle	236274

Accessories

—	Magazine, 20 rd	234708S
—	Magazine, 10 rd	234690S
—	Cable lock	701930
—	42" rifle bag	51000082
—	Tool kit	988496

Parts and accessories are available online at us.hkwebshop.com or by contacting HK Customer Service at 706-701-5554.

Every attempt has been made to ensure the accuracy of this information, however errors or changes may occur.

This page intentionally left blank.

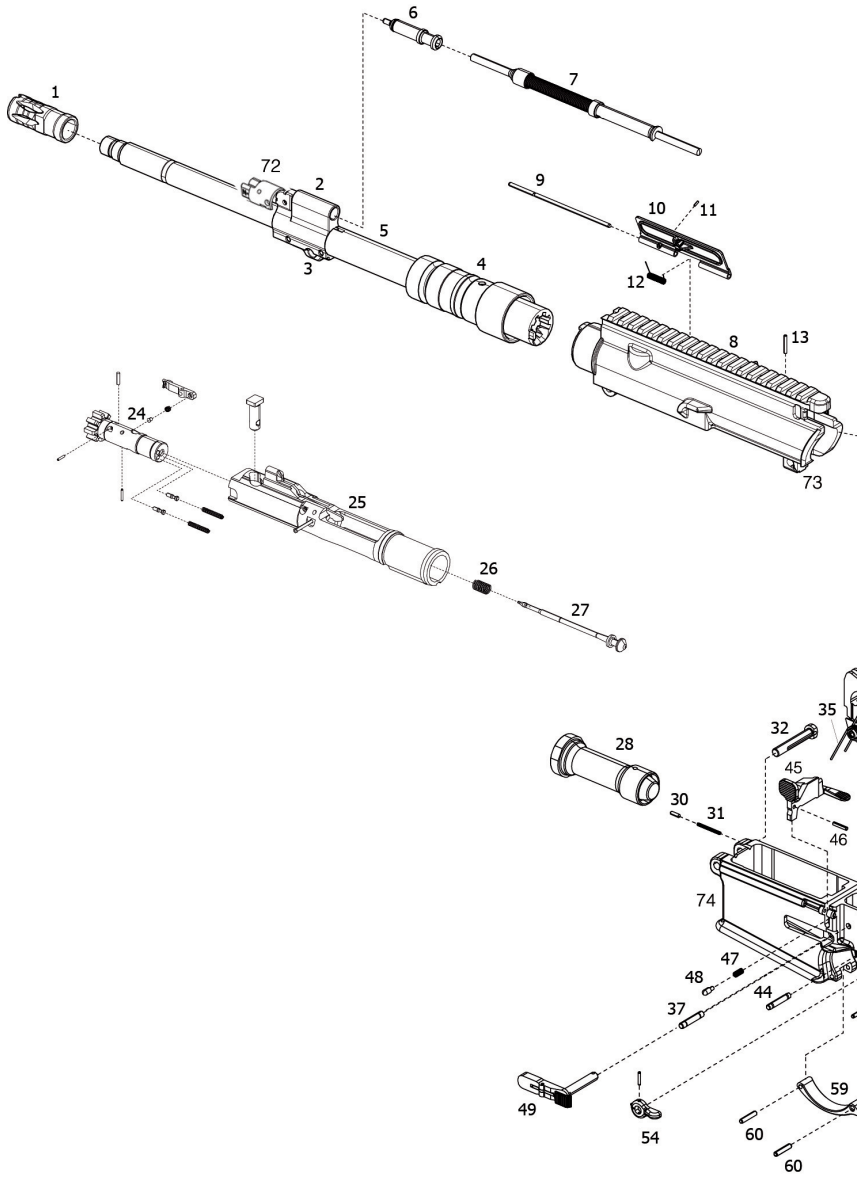
1
2
3
4
5
6
7
8
9
10
11
12
13
24
25
26
27
28
30
31
32
35
37
44
45
46
47
48
49
54
59
60
60
72
73
74

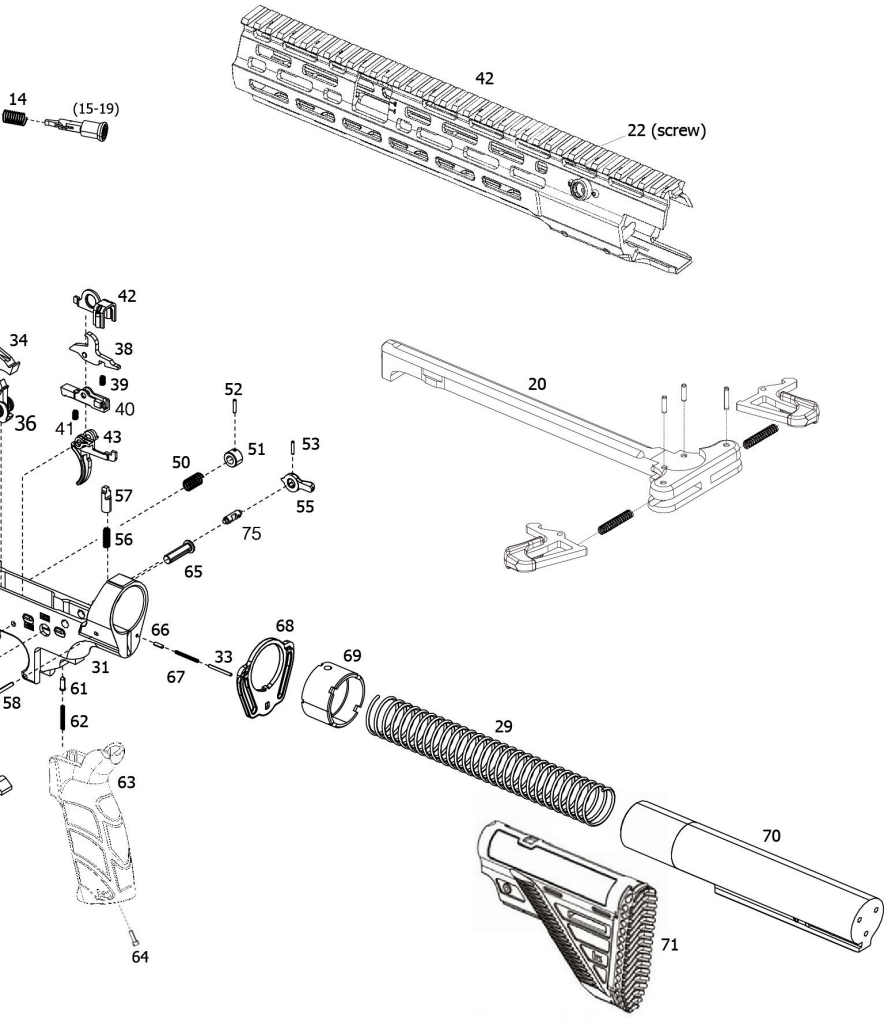
14
(15-19)
42
22 (screw)
42
34
38
39
40
36
41
43
52
51
53
50
57
55
56
75
65
20
66
68
33
69
31
67
61
58
62
29
63
70
64
71

SECTION 10 — WARRANTY AND GUARANTEE

WARRANTY REGISTRATION

New HK firearms are covered by Heckler & Koch, Inc.'s Limited Lifetime Warranty. Warranty registration is now online. To register your new HK firearm, go to:
https://hk-usa.com/warranty-registration/

If you do not have access to the Internet, contact Heckler & Koch, Inc. to obtain a warranty registration form:

HK Customer Service
5675 Transport Boulevard
Columbus, GA 31907
Telephone: 706-701-5554.
Email: cs@heckler-koch-us.com

HECKLER & KOCH, INC. LIMITED LIFETIME WARRANTY

All new Heckler & Koch, Inc. firearms purchased after January 1, 1998, are warranted to the original retail purchaser only for the lifetime of the said original retail purchaser. In the event that this original retail purchaser, at the time of the original purchase, shall donate this firearm to another person, the donee name must be submitted during the online warranty registration. Heckler & Koch, Inc. does not guarantee or warrant that any, all, or some donations or gifts are valid and compliant with all applicable laws, regulations, and ordinances. Heckler & Koch, Inc. is not responsible or liable in any way for a donation or gift that does not comply with applicable laws, regulations, and ordinances. It is the responsibility of the original retail purchaser and the donee or recipient to ensure that any such transfer complies with all applicable laws, regulations, and ordinances. Upon completion of the online warranty registration indicating the name of the said donee, this warranty shall be extended to the lifetime of the said donee. This warranty applies only if the firearm was imported into the United States and distributed by Heckler & Koch, Inc. to an authorized dealer.

What Will We Do?

Heckler & Koch, Inc. will, at its option, repair or replace, without charge, any HK firearm that fails due to a defect in materials or workmanship. Parts and labor are included. Repairs are warranted for the duration of this Limited Lifetime Warranty. If Heckler & Koch, Inc. replaces a firearm under this warranty, the replacement firearm will remain covered by this Limited Lifetime Warranty for the lifetime of the original retail purchaser or registered donee, as applicable. Heckler & Koch, Inc. will return the firearm or replacement firearm shipping prepaid, subject to applicable law and the Legal and Regulatory Restrictions on Warranty Service and Return stated below.

How to Obtain Service:

Contact Heckler & Koch, Inc. by phone at 706-701-5554 or email at cs@heckler-koch-us.com for a Return Authorization Number before sending your firearm freight prepaid to Heckler & Koch, Inc. at the address listed below. No C.O.D. shipments will be accepted.

Only the existing Heckler & Koch, Inc. Service Center or any other authorized Heckler & Koch, Inc. Service Center that may be established by Heckler & Koch, Inc. is authorized to make warranty repairs.

Return the complete, unloaded firearm with a detailed description of the problem using Heckler & Koch, Inc.'s Return Form.

DO NOT send any live ammunition with the firearm. If you must send ammunition to us for proof purposes, be sure that it is sent separately from the firearm.

We strongly recommend that you complete the online warranty registration at https://hk-usa.com/warranty-registration/ to establish eligibility for warranty service. If you do not return an acknowledgment of online warranty registration to Heckler & Koch, Inc., you are required to provide adequate proof of the date that you purchased your new HK firearm at the time you send your firearm to Heckler & Koch, Inc. for warranty service.

If this firearm was given as a gift at the time of original purchase, the online warranty registration identifying the donee must be provided to Heckler & Koch, Inc. for the warranty to become effective.

Note: Non-warranty servicing must follow the same shipping procedures stated above. HK firearms with a valid Return Authorization Number should be shipped to the following address in accordance with these instructions:

HKI
Attn: Service Department/RA#_____
5675 Transport Blvd.
Columbus, GA 31907

Any information gathered in connection with a Heckler & Koch, Inc. Limited Lifetime Warranty shall be used for that purpose and may be used for other legitimate business purposes of Heckler & Koch, Inc. For further information, please review Heckler & Koch, Inc.'s Privacy Policy, located at https://hk-usa.com/cookie-policy-us/

What Is Not Covered?
This warranty does not cover defects or damage caused by: (1) unreasonable use; (2) failure to provide proper care or maintenance; (3) failure to comply with instructions in the operator's manual, including improper installation of original Heckler & Koch, Inc. parts by the owner or the owner's agent; (4) normal wear and tear for the degree of use; (5) rust or corrosion; (6) obstructions in the barrel; (7) excessive use; and/or (8) external or internal cosmetic finishes.

Heckler & Koch, Inc. reserves the right to determine what constitutes unreasonable or excessive use of the firearm. All wooden parts and all accessories are excluded from warranty coverage.

This warranty does not cover claims made by a second or subsequent owner of an HK firearm, except for a donee identified and registered as provided above.

NOTICE **Any unauthorized alteration or modification of the firearm, or use of parts or components not originally made by Heckler & Koch, Inc., may void this warranty. Heckler & Koch, Inc. is not responsible for claims involving this firearm that result from the use of faulty, nonstandard, remanufactured, or reloaded ammunition, or ammunition not manufactured to NATO, CIP, and/or SAAMI specifications.**

Under no circumstances shall Heckler & Koch, Inc. be responsible or liable for incidental or consequential damages with respect to loss of use, loss of business or profits, other economic loss, or injury to property, whether as a result of breach of express or implied warranty, negligence, or otherwise. This Limited Lifetime Warranty applies only to retail purchases by individuals through an authorized Heckler & Koch, Inc. dealer.

LEGAL AND REGULATORY RESTRICTIONS ON WARRANTY SERVICE AND RETURN
All warranty service, repair, replacement, shipment, transfer, and return are subject to applicable federal, state, territorial, and local law in effect at the time of service and return. Where lawful, Heckler & Koch, Inc. may return a serviced firearm or lawful replacement directly to the person from whom it was received.
If applicable law requires different handling, Heckler & Koch, Inc. may require return through a federally licensed firearms dealer or another lawful method and may request dealer information or other information reasonably necessary to confirm that the return, replacement, transfer, or possession is lawful.

NOTICE **Do not ship Heckler & Koch, Inc. any firearm, frame or receiver, magazine, ammunition feeding device, or other component that cannot lawfully be shipped, possessed, received, serviced, transferred, or returned, unless specifically instructed by Heckler & Koch, Inc. Heckler & Koch, Inc. will not ship or return any item in violation of applicable law.**

Exclusions

This Limited Lifetime Warranty does not apply to firearms purchased by the United States military; federal, state, or territorial government institutions or agencies; federal, state, or local law enforcement agencies; or security organizations located within the United States or its territories for duty issue to personnel or employees. Those firearms are covered by a one-year limited warranty against defects in materials and workmanship, or as otherwise agreed in a valid contract.

This Limited Lifetime Warranty also excludes rimfire .22 LR firearms and all suppressors, which are covered by a one-year warranty.

Some states do not allow the exclusion or limitation of incidental or consequential damages, so the above limitations or exclusions may not apply to you. This warranty gives you specific legal rights, and you may also have other rights that vary from state to state. This Limited Lifetime Warranty is the only express warranty made by Heckler & Koch, Inc.
Heckler & Koch, Inc. does not authorize any dealer or other person to vary the terms of this warranty or to make any other express warranties on its behalf.

Heckler & Koch, Inc. Lifetime Barrel Guarantee

Heckler & Koch, Inc. guarantees the serviceability of the bore of the barrels of all MR A4 Series rifles and pistols for the lifetime of the original consumer purchaser for individual use. This guarantee is based on the barrels meeting standards for accuracy, velocity, and usability throughout the life of the A4 system. If at any time an A4 barrel fails to meet these standards, Heckler & Koch, Inc. will replace the barrel.

HK LIFETIME WARRANTY — ON HK MADE FIREARMS —

STATE-SPECIFIC COMPLIANCE CONSIDERATIONS

Applicable federal, state, and local laws may affect how a firearm, frame or receiver, magazine, or other component may be shipped to or returned by Heckler & Koch, Inc. in connection with warranty or service work. For current information regarding state-specific shipping and return requirements, please visit: hk-usa.com/customersuccess/returnsstatelaws.
Applicable law controls in all cases.

Where to Get Further Help

If you have questions concerning this warranty, please contact Heckler & Koch, Inc.'s Customer Service Department at:
5675 Transport Blvd.
Columbus, GA 31907
Telephone: 706-701-5554 Email: cs@heckler-koch-us.com

YOUTH HANDGUN SAFETY NOTICE

1. The misuse of handguns is a leading contributor to juvenile violence and fatalities.

2. Safely storing and securing firearms away from children will help prevent the unlawful possession of handguns by juveniles, stop accidents, and save lives.

3. Federal law prohibits, except in certain limited circumstances, anyone under 18 years of age from knowingly possessing a handgun, or any person from selling, delivering, or otherwise transferring a handgun to a person under 18.

4. A knowing violation of the prohibition against selling, delivering, or otherwise transferring a handgun to a person under the age of 18 is, under certain circumstances, punishable by up to 10 years in prison.

FEDERAL LAW

The Gun Control Act of 1968, 18 U.S.C. Chapter 44, provides in pertinent part as follows:

18 U.S.C. §922(x)

1. It shall be unlawful for any person to sell, deliver, or otherwise transfer to a person who the transferor knows or has reasonable cause to believe is a juvenile –
    A. a handgun; or
    B. ammunition that is suitable for use only in a handgun.
2. It shall be unlawful for any person who is a juvenile to knowingly possess –
    A. a handgun; or
    B. ammunition that is suitable for use only in a handgun.
3. This subsection does not apply to –
    A. a temporary transfer of a handgun or ammunition to a juvenile or to the possession or use of a handgun or ammunition by a juvenile if the handgun and ammunition are possessed and used by the juvenile –
        i.in the course of employment, in the course of ranching or farming related to activities at the residence of the juvenile (or on property used for ranching or farming at which the juvenile, with the permission of the property owner or lessee, is performing activities related to the operation of the farm or ranch), target practice, hunting, or a course of instruction in the safe and lawful use of a handgun;
        ii. with the prior written consent of the juvenile's parent or guardian who is not prohibited by Federal, State, or local law from possessing a firearm, except –
            I. during transportation by the juvenile of an unloaded handgun in a locked container directly from the place of transfer to a place at which an activity described in clause (i) is to take place and transportation by the juvenile of that handgun, unloaded and in a locked container, directly from the place at which such an activity took place to the transferor; or
            II. with respect to ranching or farming activities as described in clause (i), a juvenile may possess and use a handgun or ammunition with the prior written approval of the juvenile's parent or legal guardian and at the direction of an adult who is not prohibited by Federal, State or local law from possessing a firearm;
        iii. the juvenile has the prior written consent in the juvenile's possession at all times when a handgun is in the possession of the juvenile; and

iv. in accordance with State and local law;

B. a juvenile who is a member of the Armed Forces of the United States or the National Guard who possesses or is armed with a handgun in the line of duty;

C. a transfer by inheritance of title (but not possession) of a handgun or ammunition to a juvenile; or

D. the possession of a handgun or ammunition by a juvenile taken in defense of the juvenile or other persons against an intruder into the residence of the juvenile or a residence in which the juvenile is an invited guest.

4. A handgun or ammunition, the possession of which is transferred to a juvenile in circumstances in which the transferor is not in violation of this subsection shall not be subject to permanent confiscation by the Government if its possession by the juvenile subsequently becomes unlawful because of the conduct of the juvenile, but shall be returned to the lawful owner when such handgun or ammunition is no longer required by the Government for the purposes of investigation or prosecution.

5. For purposes of this subsection, the term "juvenile" means a person who is less than 18 years of age.

6.

A. In a prosecution of a violation of this subsection, the court shall require the presence of a juvenile defendant's parent or legal guardian at all proceedings.

B. The court may use the contempt power to enforce subparagraph (A).

C. The court may excuse attendance of a parent or legal guardian of a juvenile defendant at a proceeding in a prosecution of a violation of this subsection for good cause shown.

18 U.S.C. § 924(a)(6)

i. A juvenile who violates section 922(x) shall be fined under this title, imprisoned not more than 1 year, or both, except that a juvenile described in clause (ii) shall be

A sentenced to probation on appropriate conditions and shall not be incarcerated unless the juvenile fails to comply with a condition of probation.

ii. A juvenile is described in this clause if –

I. the offense of which the juvenile is charged is possession of a handgun or ammunition in violation of section 922(x)(2); and

II. the juvenile has not been convicted in any court of an offense (including an offense under section 922(x) or a similar State law, but not including any other offense consisting of conduct that if engaged in by an adult would not constitute an offense) or adjudicated as a juvenile delinquent for conduct that if engaged in by an adult would constitute an offense.

B. A person other than a juvenile who knowingly violates section 922(x) –

i. shall be fined under this title, imprisoned not more than 1 year, or both; and

ii. if the person sold, delivered, or otherwise transferred a handgun or ammunition to a juvenile knowing or having reasonable cause to know that the juvenile intended to carry or otherwise possess or discharge or otherwise use the handgun or ammunition in the commission of a crime of violence, shall be fined under this title, imprisoned not more than 10 years, or both.

STATE REQUIRED SAFETY NOTICES

Certain states have laws requiring that specific warnings be provided with handguns sold in those states as a result of which safety warnings are included in this manual.

CALIFORNIA:

WARNING
"Firearms must be handled responsibly and securely stored to prevent access by children and other unauthorized users. California has strict laws pertaining to firearms, and you may be fined or imprisoned if you fail to comply with them. Visit the Web site of the California Attorney General at https://oag.ca.gov/firearms for information on firearm laws applicable to you and how you can comply.

Prevent child access by always keeping guns locked away and unloaded when not in use. If you keep a loaded firearm where a child obtains and improperly uses it, you may be fined or sent to prison.

If you or someone you know is contemplating suicide, please call the national suicide prevention lifeline at 1-800-273-TALK (8255)."

ADVERTENCIA
"Las armas de fuego deben manipularse de manera responsable y segura para evitar el acceso de niños y otros usuarios no autorizados. California tiene leyes estrictas relacionadas con armas de fuego, y usted puede ser multado o encarcelado si no las cumple. Visite la pagina web del Procurador General de California en https://oag.ca.gov/firearms para obtener información sobre las leyes de armas de fuego que le son aplicables y cómo puede cumplirlas.

Evite el acceso de niños manteniendo siempre las armas bloqueadas y descargadas cuando no estén en uso. Si mantiene un arma de fuego cargada donde un niño obtiene y la usa indebidamente, se le puede multar o enviar a prisión.

Si usted o alguien que conoce está pensando en suicidarse, llame a la línea nacional de prevención del suicidio al 1-800-273-TALK (8255)."

CONNECTICUT:
"UNLAWFUL STORAGE OF A LOADED Firearm MAY RESULT IN IMPRISONMENT OR FINE."

FLORIDA:
"IT IS UNLAWFUL, AND PUNISHABLE BY IMPRISONMENT AND FINE, FOR ANY ADULT TO STORE OR LEAVE A Firearm IN ANY PLACE WITHIN THE REACH OR EASY ACCESS OF A MINOR UNDER 18 YEARS OF AGE OR TO KNOWINGLY SELL OR OTHERWISE TRANSFER OWNERSHIP OR POSSESSION OF A Firearm TO A MINOR OR A PERSON OF UNSOUND MIND."

MAINE:
"ENDANGERING THE WELFARE OF A CHILD IS A CRIME. IF YOU LEAVE A Firearm AND AMMUNITION WITHIN EASY ACCESS OF A CHILD, YOU MAY BE SUBJECT TO FINE, IMPRISONMENT OR BOTH. KEEP FIREARMS AND AMMUNITION SEPARATE. KEEP FIREARMS AND AMMUNITION LOCKED UP. USE TRIGGER LOCKS."

MARYLAND:
"WARNING: Children can operate firearms which may cause death or serious injury. It is a crime to store or leave a loaded firearm in any location where an individual knew or should have known that an unsupervised minor would gain access to the firearm. Store your firearm responsibly!"

MASSACHUSETTS:
"WARNING FROM THE MASSACHUSETTS ATTORNEY GENERAL: This handgun is not equipped with a device that fully blocks use by unauthorized users. More than 200,000 firearms like this one are stolen from their owners every year in the United States. In addition, there are more than a thousand suicides each year by younger children and teenagers who get access to firearms. Hundreds more die from accidental discharge. It is likely that many more children sustain serious wounds or inflict such wounds accidentally on others. In order to limit the chance of such misuse, it is imperative that you keep this weapon locked in a secure place and take other steps necessary to limit the possibility of theft or accident. Failure to take reasonable preventive steps may result in innocent lives being lost, and in some circumstances may result in your liability for these deaths."

"IT IS UNLAWFUL TO STORE OR KEEP A Firearm, Firearm, SHOTGUN OR MACHINE GUN IN ANY PLACE UNLESS THAT WEAPON IS EQUIPPED WITH A TAMPER-RESISTANT SAFETY DEVICE OR IS STORED OR KEPT IN A SECURELY LOCKED CONTAINER."

NEW JERSEY:
"IT IS A CRIMINAL OFFENSE, PUNISHABLE BY A FINE AND IMPRISONMENT, FOR AN ADULT TO LEAVE A LOADED Firearm WITHIN EASY ACCESS OF A MINOR."

NEW YORK CITY, NY:
"THE USE OF A LOCKING DEVICE OR SAFETY LOCK IS ONLY ONE ASPECT OF RESPONSIBLE WEAPON STORAGE. ALL WEAPONS SHOULD BE STORED UNLOADED AND LOCKED IN A LOCATION THAT IS BOTH SEPARATE FROM THEIR AMMUNITION AND INACCESSIBLE TO CHILDREN AND ANY OTHER UNAUTHORIZED PERSONS. NEW YORK CITY LAW PROHIBITS, WITH CERTAIN EXCEPTIONS, ANY PERSON FROM ACQUIRING MORE THAN ONE Firearm, OR MORE THAN ONE Firearm OR SHOTGUN, WITHIN A 90-DAY PERIOD."

NORTH CAROLINA:
"IT IS UNLAWFUL TO STORE OR LEAVE A Firearm THAT CAN BE DISCHARGED IN A MANNER THAT A REASONABLE PERSON SHOULD KNOW IS ACCESSIBLE TO A MINOR."

"Any person who resides in the same premises as a minor, owns or possesses a firearm, and stores or leaves the firearm (i) in a condition that the firearm can be discharged and (ii) in a manner that the person knew or should have known that an unsupervised minor would be able to gain access to the firearm, is guilty of a Class 1 misdemeanor if a minor gains access to the firearm without the lawful permission of the minor's parents or a person having charge of the minor and the minor:
(1) Possesses it in violation of G.S. 14-269.2(b);
(2) Exhibits it in a public place in a careless, angry, or threatening manner;
(3) Causes personal injury or death with it not in self-defense; or
(4) Uses it in the commission of a crime."

TEXAS:
"IT IS UNLAWFUL TO STORE, TRANSPORT, OR ABANDON AN UNSECURED Firearm IN A PLACE WHERE CHILDREN ARE LIKELY TO BE AND CAN OBTAIN ACCESS TO THE Firearm."

WISCONSIN:
"IF YOU LEAVE A LOADED Firearm WITHIN THE REACH OR EASY ACCESS OF A CHILD YOU MAY BE FINED OR IMPRISONED OR BOTH IF THE CHILD IMPROPERLY DISCHARGES, POSSESSES OR EXHIBITS THE Firearm."

State laws and regulations concerning firearms change constantly. Please check with your State Attorney General's Office or State Police for additional laws and regulations regarding the storage and use of firearms in your state.

Firearm Type _____ Serial Number _____

Date	Number of Rounds Fired	Cumulative Total of Rounds Fired	Users Name	Maintenance & Remarks

Firearm Type _____ Serial Number _____

Date	Number of Rounds Fired	Cumulative Total of Rounds Fired	Users Name	Maintenance & Remarks

Firearm Type _____ Serial Number _____

Date	Number of Rounds Fired	Cumulative Total of Rounds Fired	Users Name	Maintenance & Remarks

HECKLER ★ KOCH

HKUSA-51000961-082026

HECKLER & KOCH
5675 Transport Boulevard
Columbus, Georgia 31907
Tel: 706-701-5554
www.hk-usa.com

This product can expose you to chemicals including lead, which is known to the State of California to cause cancer and birth defects or other reproductive harm. For more information go to www.P65Warnings.ca.gov.